AGENDA
Town Of Indialantic
Local Planning Agency/Zoning and Planning Board
216 Fifth Avenue, Indialantic, FL, 32903, Council Chamber
Tuesday, March 23, 2021 AT 5:30 P.M.

A. Call to Order:

Rick Bertel, Chair
Ed Mackiewicz, Vice Chair
Ann Bernick, Member
Dan Sullivan, Member
Christopher Mullen, Member
Michael Lentini, 1st Alternate
Alan King, 2nd Alternate
Les Hatter, School Board Representative

B. Approval of Prior Meeting Minutes:

1. January 26, 2020 Regular Meeting Minutes

C. New Business:

1. Site Plan: Tiffany's Spa and Nail Inc.
   Address: Parcel ID 27-38-31-EO-62-12 corner of Watson Drive/SR A1A
   Applicant/Owner: Hung Nguyen
   Project Description: 2,400 sq. ft. nail salon and 1,000 sq. ft. restaurant

2. Ordinance 2021-05 relating to zoning requirements for mobile food dispensing vehicles

D. Reports – Building Official:

E. Adjourn:

NOTICE: Pursuant to Section 286.0105, Florida Statutes, the Town hereby advises the public that if a person decides to appeal a decision made by this Board with respect to any matter considered at its meeting or hearing, he or she will need a record of the proceedings and that, for such purpose, he or she may need to ensure that a verbatim record of the proceedings is made, which record includes testimony and evidence upon which the appeal is to be based, as the Town does not provide one.
Americans with Disabilities Act: Persons planning to attend the meeting who require special assistance must notify the Office of the Town Clerk at 321-723-2242 no later than 48 hours prior to the meeting.

Meeting Minutes
Town Of Indialantic
Local Planning Agency/Zoning and Planning Board
216 Fifth Avenue, Indialantic, FL, 32903, Council Chamber
Tuesday, Jan. 26, 2021 AT 5:30 P.M.

A. Call to Order:

A meeting of the Local Planning Agency/Zoning and Planning Board was called to order by Vice Chair Mackiewicz at 5:31 p.m. with the following members present:

Ed Mackiewicz, Vice Chair
Ann Bernick, Member
Dan Sullivan, Member
Michael Lentini, 1st Alternate
Alan King, 2nd Alternate

Also present:
Michael Casey, Town Manager
Cliff Stokes, Building Official
Rebekah Raddon, Town Clerk
Paul Gougelman, Town Attorney, via Teleconference
Jim LaRue, Town Planner, via Teleconference

B. Approval of Prior Meeting Minutes:

1. **December 9, 2020 Regular Meeting Minutes**
   Motion by Member Bernick, seconded by Member Sullivan, and vote unanimous to approve the minutes as written. Motion carried 5-0.

C. New Business:

1. **Updating The Five-Year Schedule Of Capital Improvements Of The Town's Comprehensive Plan As Mandated By Florida Statutes Sections 163.3177(3)(B) (Ordinance 2021-04).**

   Mr. LaRue indicated that this ordinance updates the five-year schedule of capital improvements is internally consistent with the comprehensive plan. Mr. Casey briefly summarized the changes, noting that he included a grant for playground equipment at Nance Park, several road paving projects, bond jobs and miscellaneous pipe repairs.

   Motion by Member Bernick, seconded by Member Lentini, and vote unanimous to find Ordinance 2021-04 internally consistent with the comprehensive plan and recommend its approval. Motion carried 5-0.

2. **Site Plan Modification – Casuarina Club**
   Address: 1101 S Miramar Ave
   Applicant: David Cable, HOA President

DRAFT

Project Description: 13' x 9' Pavilion in pool area

Mr. Stokes described the project and explained that it meets all the requirements of the Town code and the building code. He recommends the Board approve the site plan modification.
Motion by Member Lentini, seconded by Member Sullivan and vote unanimous to approve the site plan modification. Motion carried 5-0.

3. **(Discussion) Residential Building Height**
Mr. Stokes spoke in favor of updating the Town's code regarding residential building heights. He explained that to accommodate the current trend for 10' high ceilings, contractors are putting in mansard-style roofs and shed roofs that don't aesthetically fit the structure. He recommended the board discuss their views on allowing builders to construct single family homes limited to "two habitable stories" which would allow a pitched roof. He commented that steeper roofs get rid of water better than flat roofs and are favored by insurance companies.
Mr. Gougelman commented that this is a timely issue and it would be good to look at the trends. He noted that the Town discussed residential building heights in the 1990's and reached a compromise on limiting structures to 30 feet but that doesn't accommodate today's desire for high ceilings. Mr. LaRue offered to provide data from other municipalities. After some discussion, it was the consensus of the Board to look into this further.

4. **(Discussion) Swimming Pool Barrier Height**
Mr. Stokes explained that the Town requires a 6' pool fence whereas state statute only requires a 4' pool fence. He commented that a 6' pool fence isn't attractive on oceanfront properties and causes confusion among contractors who are accustomed to following the state's requirements, and often results in the incorrect size fence being installed and subsequently replaced. Mr. Stokes recommended the Board consider amending the code to mirror the state statute.
After some discussion, it was the consensus of the Board to consider a code amendment to allow a 4' pool barrier in accordance with state statute.

D. Reports – Building Official:

Mr. Stokes spoke briefly about an upcoming site plan that will likely be on next month's agenda.
Mr. Casey commented on parking capacity in several areas of town. He provided a brief update on a vacant parcel near Wendy's.

E. Adjourn:

There being no further discussion, a motion was made by Member Bernick, seconded my Member Sullivan, and vote unanimous to adjourn the meeting at 6:05 p.m.

_____
Rick Bertel, Chair / Ed Mackiewicz, Vice Chair

Attested by:

_____
Rebekah Raddon, CMC, Town Clerk

DRAFT

APPLICATION FOR SITE PLAN REVIEW
PLANNING AND ZONING BOARD
TOWN OF INDIALANTIC, FLORIDA

This application must be completed and returned with all enclosures referred to herein to the office of the Building Official of the Town of Indialantic, Florida. This application will be referred to the Zoning and Planning Board for their study and recommendation. You will be advised of the date and time of the meeting before the Zoning and Planning Board. You may appear at the meeting in person or be represented by an authorized agent. If you cannot attend the meeting, you should make arrangements to have an authorized representative appear on your behalf as the application can be acted upon by the Board even in your absence.

1. APPLICANT: Tiffany's Spa and Nail Inc. - Hung Nguyen owner

2. ADDRESS OF BUILDING(S) TO BE REVIEWED:
No address assigned. Corner of Watson Drive and SR A1A.
Parcel ID 27-38-31-EO-62-12

3. PHONE: 321-632-7660

4. APPLICANT'S MAILING ADDRESS: 2642 Shellwood Drive
Melbourne, FL 32934

5. LEGAL DESCRIPTION OF PROPERTY COVERED BY THIS APPLICATION (INCLUDING SUBDIVISION, BLOCK AND LOT(S):
Indialantic by the Sea, Lot 12, Blk 62
Pb 0003 Pg 0035

6. ZONING CLASSIFICATION: C (TO BE COMPLETED BY TOWN)

7. OWNER OF PROPERTY, IF DIFFERENT THAN APPLICANT:
Paul and John Beckwith Trustee (signed sale agreement attached to submittal)

8. PROPERTY OWNER'S MAILING ADDRESS:
2 Holly Circle, Indialantic, FL 32903

9. DESCRIPTION OF PROJECT:
2,4700 sf Nail Salon and 1,000 sf restaurant with
required parking, stormwater, drainage, etc.

PROCEDURES FOR OBTAINING SITE PLAN APPROVAL SHALL BE AS FOLLOWS:

(1) PREAPPLICATION CONFERENCE: The applicant shall meet with the Building Official to discuss basic site plan requirements, consider preliminary features of the site and the proposed development, and determine if the proposed use conforms to the zoning requirements of the district.

(2) SITE PLAN CHECKLIST: The applicant shall properly fill out a checklist provided by the Building Official. This checklist will summarize the site plan and it will be used as a guide for site plan evaluation.

(3) PRELIMINARY SITE PLAN: Following the preapplication conference, 10 copies of a preliminary site plan prepared by a registered civil engineer or architect showing the proposed general layout, and a vicinity map showing the location of abutting streets, existing and proposed utilities, and storm drainage systems in accordance with the site plan requirements shall be submitted to the Building Department.

(4) REVIEW AND RECOMMENDATIONS: Applications for site plan approval shall be submitted to the Building Official, who shall forward copies of the proposed plans to the Fire Department for its written recommendations regarding health, safety and welfare.

Upon completion of the above four steps and receipt of the recommendation from the Fire Department, the Zoning and Planning Board shall review the site plan and any recommendations at their next regular meeting.

Per Indialantic Code Section 17-129:

The zoning board shall not approve such plan unless it finds that such site plan conforms to all applicable provisions of the Town Code of Ordinances, that adequate off-street parking and loading facilities are provided for owners, tenants, visitors, and employees, and that adequate protection and separation are provided for contiguous and nearby residential property.

The zoning board may attach to its approval of a site plan any reasonable conditions, limitations or requirements which are found necessary in its judgment to effectuate the purpose of this section and carry out the spirit and purpose of the zoning ordinance.

Modification of site plan. Any change in use of buildings, structures, land or water, or institution of new uses, or alteration of or addition to buildings or structures shall be in accordance with a new or modified site plan conforming and approved pursuant to this section.

Approval not transferable; time limit. Whenever site approval shall have been granted, it shall not be considered to run with the land. The site plan approval shall terminate six (6) months thereafter if construction has not been started. Extensions may be made by the zoning board at its discretion. In the event the property receiving site plan approval shall be sold, transferred, leased, or the ownership thereof changed in any way whatsoever, before the approved construction is completed the site plan approval shall become null and void.
(Code 1962, 28-98A; Ord. No. 217, 1, 10-18-77; Ord. No. 89-11 2, 4-18-89)

SITE PLAN CHECK LIST

In reviewing such site plan the zoning board shall consider the location, size, height, spacing, appearance, character and utilization of any building, structure or use and their appurtenances, access and circulation of vehicles and pedestrians, streets, parking area, yards and open spaces, landscaping, and relationship to adjacent property.

A site plan shall include, but not necessarily be limited to the following:

X (a) Site plan with grades or contours.

X (b) Elevations, floor plans and uses of all buildings and structures.

X (c) Location and character of all outside utilities.

X (d) All curb cuts, driveways, parking areas, loading areas, and surfacing materials of same.

X (e) All pedestrian walks, malls, yards, and open spaces.

X (f) Location, size, character, height and orientation of all signs.

X (g) Location, height and general character of walls and fences.

X (h) Location and general character of landscaped areas and the common and botanical name of all trees, shrubs, and plants, with the number and size of each category or individual item, and the proposed watering and continued care in order to maintain the landscaping in accordance with approved site plan.

X (i) All buildings constructed in those areas designated as special hazard areas on the current flood hazard boundary maps published by the Department of Housing and Urban Development, Federal Insurance Administration, shall have all finished floor elevations related to Coast and Geodetic Survey mean sea level datum.

NEW BUILDING FOR :
TIFFANY NAILS -AIA INDIALANTIC FL

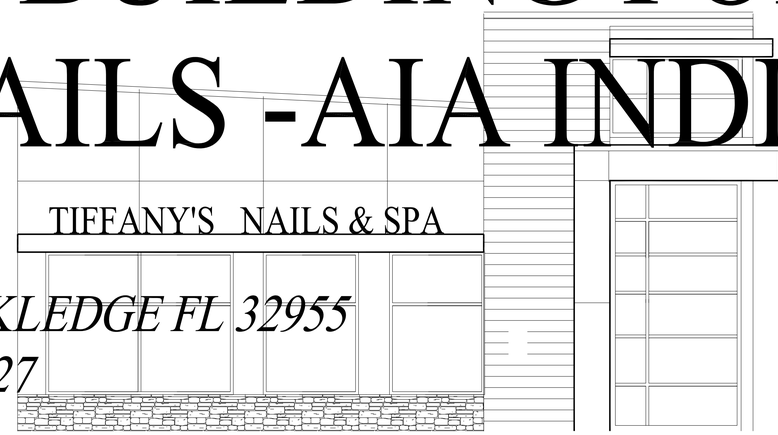

CONTRACTOR:

W&J CONSTRUCTION
1005 VIERA BLVD , ROCKLEDGE FL 32955
321. 632.7660 FAX 321.5927

ARCHITECT:

DNA ARCHITECTS LLC
415 S. BABCOCK ST
MELBOURNE FL 32901
727.9096 FAX 727.0810

STRUCTURAL ENGINEER:

C.E.G.
2651 W. EAU GALLIE BLVD SUITE A
MELBOURNE FLORIDA 32935
253.1221 FAX 253.3123

MECHANICAL,ELECTRICAL,PLUMBING ENGINEERS:

DDC ENGINEERING , INC
4083 S. HIGHWAY US 1 SUITE 101
ROCKLEDGE FL 32955
321.633.4522 FAX 321.633.4528

G.1 GENERAL NOTES
LS.1 LIFE SAFETY PLAN
A..1 DIMENSIONAL PLAN
A.1.1 FLOOR PLAN WITH FURNITURE
A.2 REFLECTIVE CEILING PLAN
A.2.1 CEILING DETAILS
A.2.2 CEILING DETAILS
A.3 ROOF PLAN
A.3.1 ROOF DETAILS
A.4 BUILDING ELEVATIONS
A.5 BUILDING ELEVATIONS
A.6 BUILDING SECTIONS
A.7 BUILDING SECTIONS
A.8 BUILDING SECTIONS
A.9 WALL SECTIONS
A.10 PARTITION SCHEDULE
A.10.1 FIRE WALL DETAILS/PLATFORM DETAILS
A.11 DOOR SCHEDULE
A.12 WINDOW SCHEDULE
A.13 BATHROOM ELEVATIONS
A.14 CABINETRY ELEVATIONS
A.14.1 CABINETRY ELEVATIONS
A.15 ROOF LADDER DETAILS
A.16 FINISH SCHEDULE

S0.0 STRUCTURAL COVER SHEET
S0.1 GENERAL NOTES
S0.2 SCHEDULES
S0.3 MASONRY SPECIFICATIONS
S1.0 FOUNDATION PLAN
S2.0 ROOF FRAMING PLAN
S3.0 BUILDING SECTIONS
S4.0 WALL ELEVATIONS
S5.0 SECTIONS AND DETAILS
S6.0 SECTIONS AND DETAILS

M.1 MECHANICAL LEGEND, SCHEDULE AND DETAILS
M.2 MECHANICAL PLAN
M.3 MECHANICAL ROOF PLAN
P.1 PLUMBING LEGEND , SCHEDULES AND DETAILS
P.2 PLUMBING SEWER PLAN
P.3 PLUMBING WATER PLAN
P.4 PLUMBING RISER DIAGRAMS
E.1 ELECTRICAL LEGEND AND DETAILS
E.2 ELECTRICAL POWER PLAN
E.3 ELECTRICAL LIGHTING PLAN
E.4 ELECTRICAL ELEVATION LIGHTING PLAN
E.5 ELECTRICAL PANELS AND RISER

ARCHITECTS SEAL

GENERAL NOTES:

1. THE INTENT OF THESE DOCUMENTS IS TO INCLUDE ALL WORK AND ITEMS NECESSARY FOR THE COMPLETION OF WORK. THE WORK SHALL BE REQUIRED WHETHER OR NOT SHOWN ON THE PLANS AND/OR CONSTRUCTION DOCUMENTS, BUT ARE REASONABLE INFERABLE AS BEING NECESSARY TO PROVIDE THE INTENDED RESULTS.
2. ALL WORK SHALL CONFORM TO THE 2020 FLORIDA BUILDING CODES.
3. ALL MATERIALS SHALL BE NEW.
4. ALL WORK SHALL BE OF THE HIGHEST QUALITY FOR THE TRADE INVOLVED.
5. THE GENERAL CONTRACTOR OR ANY SUBCONTRACTORS SHALL CLEARLY LIST ON HIS BID ANY WORK NOT INCLUDED.
6. ALL WORK AND MATERIALS SHALL BE GUARANTEED FOR A MINIMUM OF 1 YEAR FROM THE DATE OF CERTIFICATE OF OCCUPANCY OF THE JOB.
7. THE GENERAL CONTRACTOR SHALL REVIEW THE PLANS AND FIELD CONDITIONS AND BECOME FAMILIAR WITH THE WORK. SHOULD HE BECOME AWARE OF ANY DISCREPANCIES, HE SHALL IMMEDIATELY ADVISE THE ARCHITECT PRIOR TO COMMENCING WORK.
8. ALL BIDDERS AND THEIR SUBS SHALL BE CURRENTLY LICENSED IN THE STATE OF FLORIDA.
9. THE OWNER RESERVES ALL RIGHTS TO REJECT ANY AND ALL BIDS.
10. SUBSTITUIONS OF ITEMS BY THE GENERAL CONTRACTOR OR HIS SUBS WHICH THEY BELIEVE TO BE EQUAL OR BETTER SHALL BE APPROVED BY THE OWNER. SAID ITEMS WHEN REQUIRING APPROVAL BY A BUILDING OFFICAL ARE TO BE SUBMITTED TO THE BUILDING DEPARTMENT.
11. THE GENERAL CONTRACTOR SHALL MAINTAIN REQUIRED BARRICADES, WARNING DEVICES,SHORING AND ALL MEASURES NECESSARY TO PROTECT THE WORKMEN AND THE PUBLIC AS REQUIRED BY THE REGULATORY BODIES HAVING JURISDICTION.
12. THE GENERAL CONTRACTOR SHALL COORDINATE THE WORK OF ALL TRADES AND AS THE ARCHITECT WILL NOT BE PROVIDING ARCHITECTURAL OR CONSTRUCTION INSPECTION SERVICES, THE OWNER AND GENERAL CONTRACTOR SHALL BE RESPONSIBLE FOR THE QUALITY OF WORKMANSHIP.
13. THE SHEETS OF CONSTRUCTION DOCUMENTS ARE COMPLIMENTARY TO EACH OTHER. WHAT IS CALLED FOR ON ONE IS BINDING FOR ALL .
14. THE GENERAL CONTRACTOR SHALL OBTAIN ADEQUATE LIABILITY INSURANCE AND MAINTAIN THE POLICY THROUGHOUT THE JOB.
15. COORDINATION OF ALL WORK SHALL BE THE GENERAL CONTRACTOR'S RESPONSIBILITY AND ALL SUBCONTRACTORS SHALL REVIEW ANY PLANS WHICH COULD AFFECT THE INSTALLATION OF THEIR WORK.
16. THE GENERAL CONTRACTOR OR HIS SUBS SHALL ASK FOR DETAILS WHENEVER UNCERTAIN ABOUT METHODS OF INSTALLATION. LACK OF DETAILS NOT REQUESTED SHALL NOT EXCUSE IMPROPER INSTALLATION.
17. A CERTIFICATE OF OCCUPANCY/COMPLETION SHALL BE ISSUED BY THE BUILDING DEPARTMENT PRIOR TO FINAL PAYMENT.
18. CONTRACTOR NOTE: BIDDERS BEFORE SUBMITTING PROPOSALS SHALL VISIT AND CAREFULLY EXAMINE THE AREA AFFECTED BY THIS WORK TO FAMILIARIZE THEMSELVES WITH THE EXISTING CONDITIONS AND THE DIFFICULTIES THAT WILL AFFECT THE EXECUTION OF THIS WORK. SUBMISSION OF A PROPOSAL WILL BE CONSTRUED AS EVIDENCE THAT SUCH AN EXAMINATION HAS BEEN MADE AND LATER REQUIRED BECAUSE OF DIFFICULTIES ENCOUNTERED WHICH COULD HAVE BEEN FORSEEN HAD SUCH AND EXAMINATION BEEN MADE.
19. CONTRACTOR SHALL COORDINATE HIS WORK WITH THAT OF THE STRUCTURAL, PLUMBING, MECHANICAL & ELECTRICAL SUBCONTRACTORS BEFORE THE WORK IS STARTED.
20. ANY PENETRATIONS MADE IN A FIRE RATED WALL SHALL BE PROPERLY SEALED. SEE BLDG DEPT NOTES 15 & 16.
21. CONTRACTORS SHALL PROVIDE ALL SHORINGS, BRACINGS, BARRICADES, ETC. TO ACCOMPLISH ALL THE WORK IN AN APPROVED MANNER.
22. ALL DIMENSIONS AND CONDITIONS SHALL BE CHECKED AND VERIFIED AT THE JOB SITE. UNDER NO CIRCUMSTANCES IS THE CONTRACTOR TO SCALE DRAWINGS TO OBTAIN DIMENSIONS. IF THERE IS ANY QUESTION REGARDING LACK OF DIMENSIONS, THE CONTRACTOR IS TO NOTIFY THE ARCHITECT IMMEDIATELY AND THE INFORMATION SHALL BE PROVIDED.
23. GENERAL CONTRACTOR TO COORDINATE ALL ITEMS NOT IN HIS CONTRACT.
24. THE CONTRACTOR IS RESPONSIBLE FOR ALL SITE SAFETY PROVISIONS AND MEASURES DURING CONSTRUCTION. DAVID NAGRODSKY ARCHITECTS, INC. SHALL BE HELD HARMLESS FROM ANY CLAIM OR LIABILITY FROM INJURY OR LOSS FROM FAILURE TO EXERCISE SITE SAFETY RESPONSIBILITY.
25. THE ARCHITECT IS NOT RESPONSIBLE FOR HIS CONSULTANTS ERRORS AND OMISSIONS AND CLAIM CANNOT BE BROUGHT UPON HIM FOR SUCH ERRORS.
26. CONTRACTOR IS TO PATCH ALL FIRE RATED WALLS AS REQUIRED WHETHER BY NEW CONSTRUCTION OR EXISTING CONDITIONS.
27. THE CONSTRUCTION DOCUMENTS HAVE BEEN PREPARED WITH THE UNDERSTANDING THAT THE CONTRACTOR IS KNOWLEDGEABLE IN STANDARD CONSTRUCTION REQUIREMENTS AND FLORIDA BUILDING CODE REQUIREMENTS. ALL WORK SHALL COMPLY WITH BUILDING CODE REQUIREMENTS WEATHER OR NOT DETAILED OR DESCRIBED IN THE DOCUMENTS. BUILDING CODE REQUIREMENTS TO SUCCESSFULLY COMPLETE THE WORK SHALL BE INCLUDED IN THE CONTRACTORS BID. THE CONSTRUCTION DOCUMENTS SHALL NOT BE CONSIDERED AS ALL INCLUSIVE. THE ARCHITECT CAN NOT FORESEE BUILDING DEPARTMENT COMMENTS, WEATHER FOUNDED OR NOT, THAT MAY REQUIRE ADDITIONAL COSTS TO THE CLIENT AND THEREFORE CANNOT BE HELD RESPONSIBLE FOR SUCH ADDITIONAL COSTS.

BUILDING DEPARTMENT NOTES:

1. SEE PROJECT DATA FOR FIRE SPRINKLER/ALARM SYSTEM REQUIREMENTS FOR THIS BUILDING.
2. THE WORK DEPICTED IN THE CONSTRUCTION DOCUMENTS CONFORM TO THE 2017 6TH EDITION FLORIDA BUILDING CODES.
3. IN NO CASE SHALL ANY EGRESS CORIDOR BE LESS THAN 44" INCHES IN CLEAR WIDTH UNLESS OTHERWISE PERMITTED BY CODE. EXIT ACCESS AISLES & CLEARANCE BETWEEN FIXTURES SHALL BE A MIN 36" WIDE.
4. THE PROPOSED BUILDING/SPACE SHALL BE HANDICAPPED ACCESSIBLE. CHANGES IN LEVEL GREATER THAN 1/2" ALONG THE ACCESSIBLE PATH OF TRAVEL SHALL BE RAMPED.
5. EXTERIOR DOOR LANDINGS SHALL BE WITHIN 1/4" OF THE INTERIOR FLOOR SURFACE AND SHALL NOT SLOPE MORE THAN 2% IN ANY DIRECTION. LANDING DEPTH SHALL BE AT LEAST EQUAL TO THE WIDTH OF THE DOOR LEAF. ADDITIONAL SPACE MAY BE REQUIRED FOR ACCESSIBILITY MANEUVERING. THRESHOLD HEIGHT SHALL NOT EXCEED 1/2".
6. ALL NEW DOORS SHALL HAVE LEVER OR OTHER APPROVED TYPE HARDWARE PER THE FLORIDA BUILDING CODE.
7. ALL DOORS THAT ARE EQUIPPED WITH CLOSERS SHALL COMPLY WITH THE OPENING FORCES SPECIFIED IN THE FLORIDA BUILDING CODE; EXTERIOR DOORS 8.5 POUNDS/FOOT MAX., INTERIOR DOORS 5 POUNDS/FOOT MAX.
8. A LATCH OR OTHER FASTENING DEVICE SHALL BE PROVIDED WITH ONLY ONE KNOB, HANDLE, PANIC BAR, OR OTHER SIMPLE TYPE OF RELEASING DEVICE. LOCKING DEVICES SHALL NOT REQUIRE THE USE OF A KEY, TOOL, SPECIAL KNOWLEDGE OR EFFORT FROM INSIDE THE BUILDING. DOUBLE KEYED CYLINDER LOCKS ARE PROHIBITED. LOCKING DEVICES ON EXIT DOORS SHALL BE DIRECT ACTING REQUIRING NO MORE THAN A SINGLE MOTION TO UNLATCH THE DOOR.
8. MEANS OF EGRESS SHALL BE ARRANGED AND MAINTAINED TO PROVIDE AN UNOBSTRUCTED PATH OF EGRESS FROM ALL PARTS OF THE BUILDING OR SPACE AT ALL TIMES WHEN OCCUPIED.
9. THE FLOORS AND WALKING SURFACES WITHIN AN EXIT AND PORTION OF THE EXIT ACCESS AND EXIT DISCHARGE DESIGNATED IN FBC SECTION 1006.2 SHALL BE ILLUMINATED TO VALUES OF AT LEAST 1 FOOTCANDLE (10LUX) MEASURED AT THE FLOOR. DURING CONDITIONS OF STAIR USE, THE MIN ILLUMINATION FOR NEW STAIRS SHALL BE AT LEAST 10 FOOTCANDLE (108 LUX) MEASURED AT THE WALKING SURFACE. A FUNCTIONAL TEST OF THE EMERGENCY LIGHTING SHALL BE MADE USING A LIGHT METER TO MEASURE FOOT–CANDLES, PRIOR TO FINAL INSPECTION. (ADDITIONAL LIGHTING UNITS MAY BE NEEDED.) LIGHTS ARE NOT REQUIRED IN INDIVIDUAL ROOMS UNLESS EGRESS IN DIRECTED THROUGH THE ROOM TO AN EXIT.
10. CALL FOR AN EMERGENCY LIGHT TEST. PROVIDE FOR SUFFICIENT LEAD TIME PER LOCAL JURISDICTION REQUIREMENTS.
11. ALL EXITS WITH THE EXCEPTION OF THE MAIN ENTRANCE SHALL BE MARKED WITH AN APPROVED INTERNALLY OR EXTERNALLY ILLUMINATED SIGN. MAIN ENTRANCES MUST BE CLEARLY IDENTIFIABLE AS AN EXIT. INTERNALLY ILLUMINATED SIGNS SHALL COMPLY WITH UL924. WHERE EMERGENCY LIGHTING IS REQUIRED, SIGNS SHALL BE ILLUMINATED BY THE EMERGENCY LIGHTING. PROVIDE A MINIMUM CLEARANCE OF 80 INCHES BELOW CEILING OR PROJECTED EXIT SIGNS.
12. PROVIDE PORTABLE FIRE EXTINGUISHERS PER NFPA 10 HAVING A MINIMUM RATING OF 2A–10BC FOR EVERY 3000 SQ FT. OF FLOOR AREA. TRAVEL DISTANCE TO AN EXTINGUISHER SHALL NOT EXCEED 75 FEET. ALL EXTINGUISHERS SHALL BE CONSPICUOUSLY LOCATED AND READILY ACCESSIBLE. THE TOP OF THE EXTINGUISHER SHALL NOT BE MORE THAN 5 FEET ABOVE THE FLOOR AND THE BOTTOM OF THE EXTINGUISHER SHALL NOT BE LESS THAN 4 INCHES FORM THE FLOOR NOR PROTRUDE MORE THAN 4" OFF THE WALL. VERIFY TYPE, SIZE AND LOCATION WITH THE FIRE INSPECTOR AT FINAL INSPECTION.
13. FIRE EXTINGUISHERS SHALL BE INSPECTED AND TAGGED BY A STATE CERTIFIED FIRE EXTINGUISHER COMPANY. FLORIDA ADMIN CODE 69A–21. FIRE EXTINGUISHERS MUST BE APPROX 5LB (UL RATED 2A10BC) MIN FOR BUSINESS AND 10BC (UL RATED 4A20BC) FOR ALL OTHER OCCUPANCY TYPES.
14. PENETRATIONS THROUGH FIRE BARRIERS SHALL BE PROTECTED WITH AN APPROVED THROUGH PENETRATION SYSTEM CAPABLE OF MAINTAINING THE FIRE RESISTANCE OF THE FIRE BARRIER(S). SEE PLANS FOR APPROVED PROTECTION SYSTEMS.
15. FIRE OR SMOKE RATED PARTITIONS WHICH ABUT A CEILING OR ROOF ASSEMBLY, SHALL BE SEALED IN AN APPROVED METHOD TO PREVENT FIRE AND SMOKE PASSAGE.
16. ELECTRICAL OUTLETS LOCATED IN FIRE RATED ASSEMBLIES SHALL BE A MINIMUM 24" APART AND SHALL BE LISTED FOR THE INTENDED USE. (UL, WHI, ETC.) OUTLETS ON OPPOSING SIDES SHALL NOT OCCUR IN THE SAME STUD SPACE.
17. WALLS WITHIN 24" OF TOILETS AND URINALS SHALL HAVE A HARD, SMOOTH NONABSORBENT SURFACE TO A HEIGHT OF 4 FEET ABOVE THE FLOOR. TOILET ROOMS SHALL HAVE A NONABSORBENT FLOOR MATERIAL EXTENDING MIN 6" UP WALLS.

CHEMICAL SOILS TERMITE TREATMENT

THE CHEMICAL BARRIER METHOD SHALL BE COMPLETED IN ACCORDANCE WITH THE FLORIDA BUILDING CODE.
A CERTIFICATE OF COMPLIANCE MUST BE ISSUED TO THE BUILDING DEPARTMENT BY A LICENSED PEST CONTROL COMPANY BEFORE A CERTIFICATE OF OCCUPANCY WILL BE ISSUED.
THE CERTIFICATE OF COMPLIANCE SHALL STATE:
THE BUILDING HAS RECEIVED A COMPLETE TREATMENT FOR THE PREVENTION OF SUBTERRANEAN TERMITES. THE TREATMENT IS IN ACCORDANCE WITH THE RULES AND LAWS OF THE FLORIDA DEPARTMENT OF AGRICULTURE AND CONSUMER SERVICES.

PROJECT DATA

CONSTRUCTION TYPE: IIB
OCCUPANCY : BUSINESS
AREA: TAKE OUT: 917 SF
NAIL SALON: 25545 SF
3471 SF
OCCUPANT LOAD:
TAKE OUT: 917 SF /100 SF = 10 PEOPLE
NAIL SALON: 25545 SF/100SF= 26 PEOPLE
TOTAL: 36 PEOPLE
TRAVEL DISTANCE: 200'-0"
FIRE SPRINKLER SYSTEM: NO
FIRE ALARM SYSTEM: NO

APPLICABLE CODES: FBC 2020 (7TH EDITION)
FLORIDA ACCESSIBLE CODE: 2020
FLORIDA BUILDING CODE: 2020
FLORIDA PLUMBING CODE: 2020
FLORIDA MECHANICAL CODE: 2020
FLORIDA FUEL GAS CODE: 2020

FLORIDA FIRE PROTECTION ASSOCIATION (NFPA) 7 TH EDITION
NATIONAL ELECTRICAL CODE ,2017 ADOPTIVE TO 2020 FBC (NEC)
NATIONAL ELECTRICAL MANUFACTURERS ASSOC (NEMA)
NATIONAL ELECTRICAL CONTRACTORS ASSOC(NECA)
AMERICAN NATIONAL STANDARDS INSTITUTE, (ANSI)
UNDERWRITERS LABORATORIES , (UL)
ALL LOCAL CODES,ORDINANCES , REGULATIONS
THE AUTHORITY HAVING JURISDICTION

MINIMUM INTERIOR FINISH CLASSIFICATION:
NON SPRINKLERED

EXITS: A
EXIT ACCESS: B
OTHER SPACES: C

ARCHITECTS SEAL

DNA ARCHITECTS , LLC.
415 S BABCOCK ST MELBOURNE FL 32901
3217279096 FAX 3217270810
dnadav@aol.com
AR0015738 WWW.DNA–ARCHITECTS.COM

THESE PLANS ARE AN INSTRUMENT OF SERVICE AND ARE THE PROPERTY OF THE ARCHITECT.INFRINGEMENTS WILL BE PROSECUTED.

DNA

PROJECT: NEW BUILDING FOR:
TIFFANY NAILS & SPA
AIA INDIALANTIC FL

DRAWING

GENERAL NOTES/CODE REVIEW

DATE: 2.15.21 DRAWN BY: DN
SCALE: CHECKED BY:

G.1

REV	DATE	DESCRIPTION	BY

ALL FIRE EXTINGUISHERS TO BE -K- TYPE FOR KITCHENS.
ALL FIRE EXTINGUISHERS TO BE -2A-10BC- TYPE.
SEE NFPA 13.6.2, 13.6.8 13.6.4. AND 13.6.7.2.1
MOUNTING HTS PER 13.6.8.1.3.8.1:
WT NOT EXCEEDING 40LBS TOP OF FIRE EXTING
SHALL NOT BE HIGHER THAN 5'-0"
IF MORE THAN 40 LBS , THAN HT SHALL NOT EXCEED
3'-6" AFF. ALL FIRE EXTINGUISHERS SHALL BE
SURFACE MOUNTED

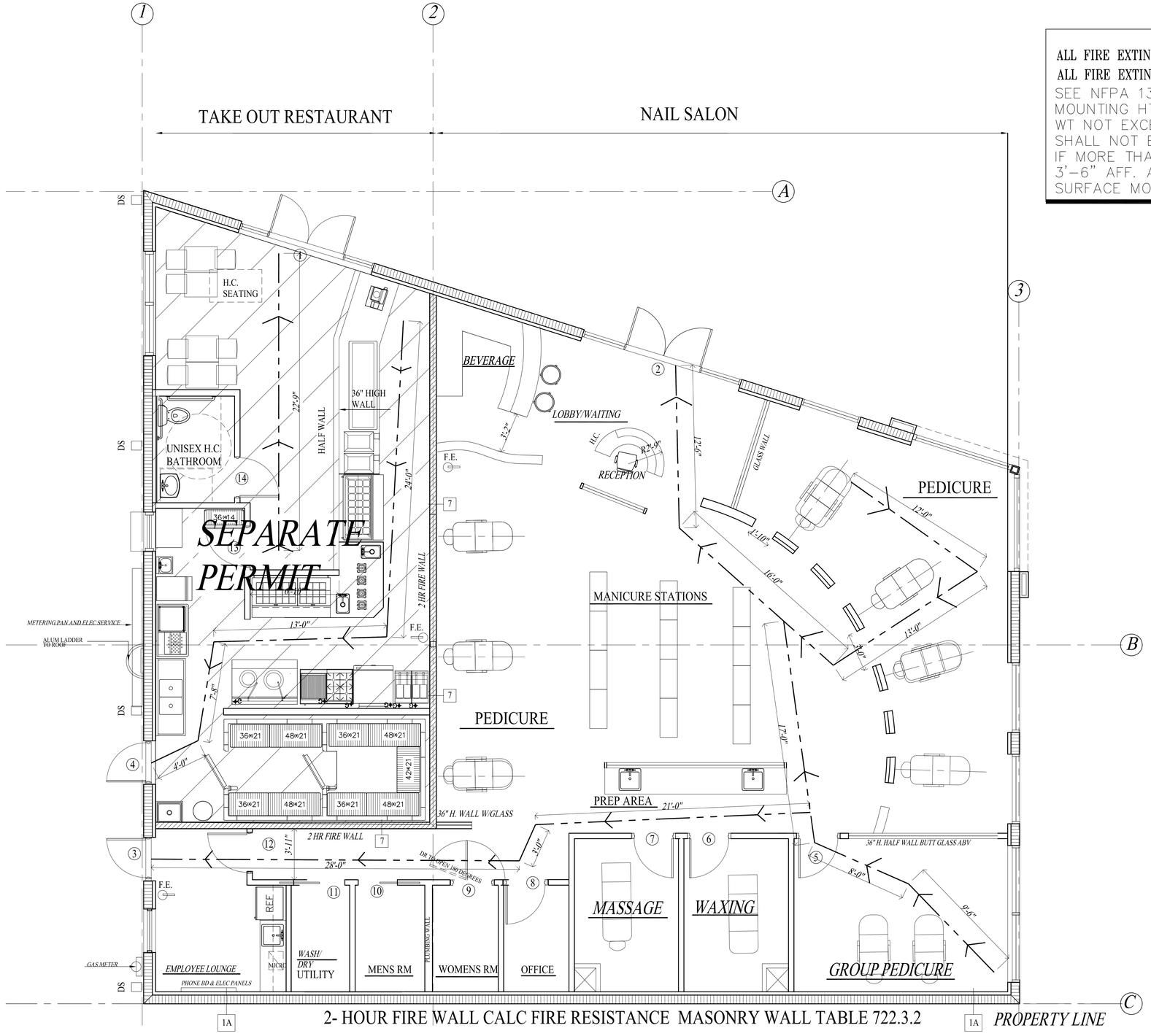

2- HOUR FIRE WALL CALC FIRE RESISTANCE MASONRY WALL TABLE 722.3.2

CONTRACTOR IS TO PROVIDE A LETTER FROM MASONRY CO. TO BUILDING OFFICIAL STATING THIS WALL MEETS OR EXCEEDS 2 HR RATING

PROJECT DATA

CONSTRUCTION TYPE: IIB
OCCUPANCY : BUSINESS
AREA: TAKE OUT: 917 SF
NAIL SALON: 25545 SF
3471 SF
OCCUPANT LOAD:
TAKE OUT: 917 SF /100 SF = 10 PEOPLE
NAIL SALON: 25545 SF/100SF= 26 PEOPLE
TOTAL: 36 PEOPLE
TRAVEL DISTANCE: 200'-0"
FIRE SPRINKLER SYSTEM: NO
FIRE ALARM SYSTEM: NO

APPLICABLE CODES: FBC 2020 (7TH EDITION)
FLORIDA ACCESSIBLE CODE: 2020
FLORIDA BUILDING CODE: 2020
FLORIDA PLUMBING CODE: 2020
FLORIDA MECHANICAL CODE: 2020
FLORIDA FUEL GAS CODE: 2020

FLORIDA FIRE PROTECTION ASSOCIATION (NFPA) 7 TH EDITION
NATIONAL ELECTRICAL CODE ,2017 ADOPTIVE TO 2020 FBC (NEC)
NATIONAL ELECTRICAL MANUFACTURERS ASSOC (NEMA)
NATIONAL ELECTRICAL CONTRACTORS ASSOC(NECA)
AMERICAN NATIONAL STANDARDS INSTITUTE, (ANSI)
UNDERWRITERS LABORATORIES , (UL)
ALL LOCAL CODES,ORDINANCES , REGULATIONS
THE AUTHORITY HAVING JURISDICTION

MINIMUM INTERIOR FINISH CLASSIFICATION:
NON SPRINKLERED

EXITS: A
EXIT ACCESS: B
OTHER SPACES: C

ARCHITECTS SEAL

DNA ARCHITECTS , LLC.
415 S BABCOCK ST MELBOURNE FL 32901
3217279096 FAX 3217270810
dnadav@aol.com
AR0015738 WWW.DNA-ARCHITECTS.COM

THESE PLANS ARE AN INSTRUMENT OF SERVICE AND ARE THE PROPERTY OF THE ARCHITECT.INFRINGEMENTS WILL BE PROSECUTED.

DNA

PROJECT: NEW BUILDING FOR:
TIFFANY NAILS & SPA
AIA INDIALANTIC FL

DRAWING

LIFE SAFETY PLAN

DATE: 2.15.21 DRAWN BY: DN
SCALE: 1/4"=1'-0" CHECKED BY:

LS.1

REV	DATE	DESCRIPTION	BY

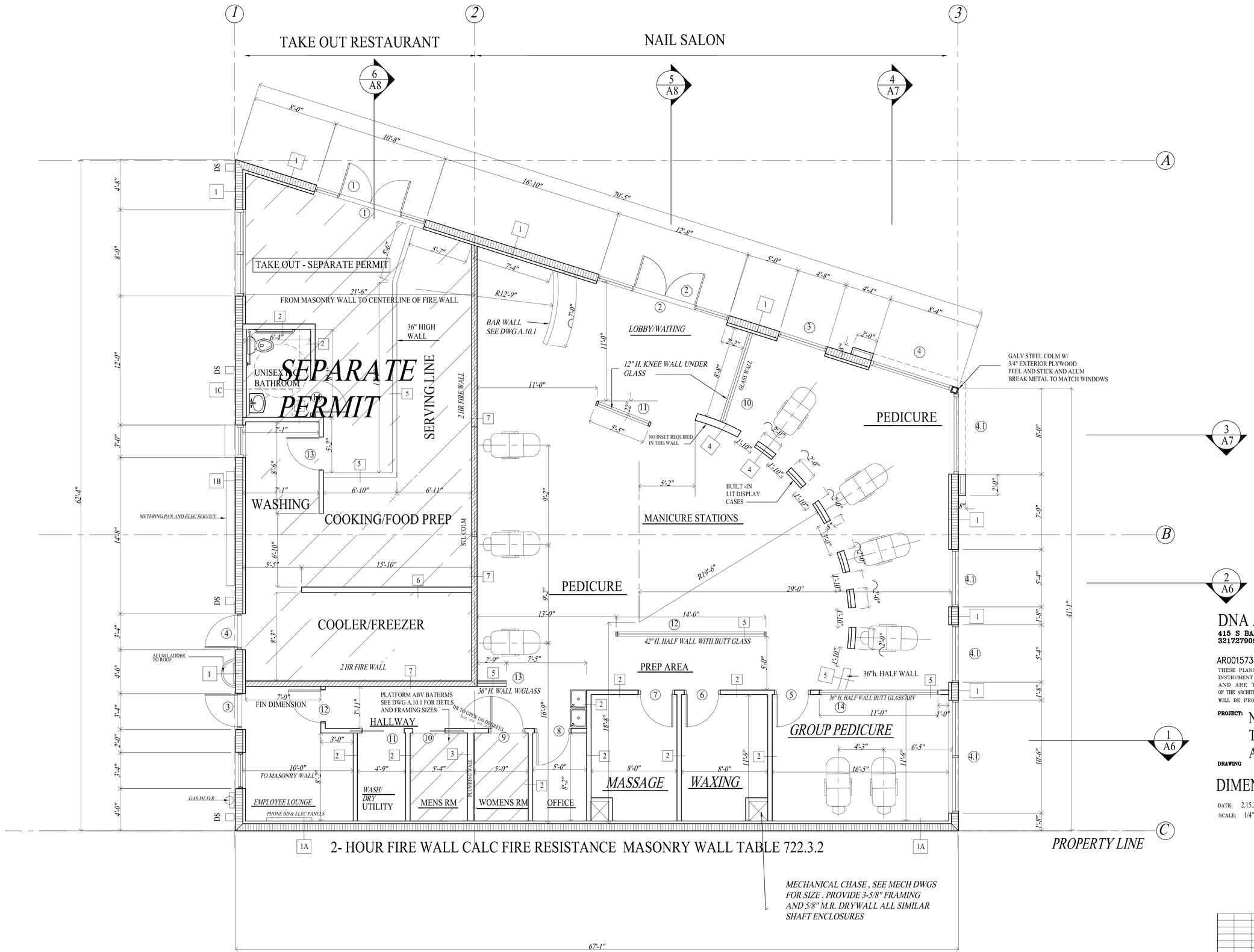

ARCHITECTS SEAL

DNA ARCHITECTS , LLC.
415 S BABCOCK ST MELBOURNE FL 32901
3217279096 FAX 3217270810
dnadav@aol.com
AR0015738 WWW.DNA-ARCHITECTS.COM

THESE PLANS ARE AN INSTRUMENT OF SERVICE AND ARE THE PROPERTY OF THE ARCHITECT.INFRINGEMENTS WILL BE PROSECUTED.

DNA

PROJECT: NEW BUILDING FOR: TIFFANY NAILS & SPA AIA INDIALANTIC FL

DRAWING

DIMENSIONAL FLOOR PLAN

DATE: 2.15.21 DRAWN BY: DN

SCALE: 1/4"=1'-0" CHECKED BY:

A.1

REV	DATE	DESCRIPTION	BY

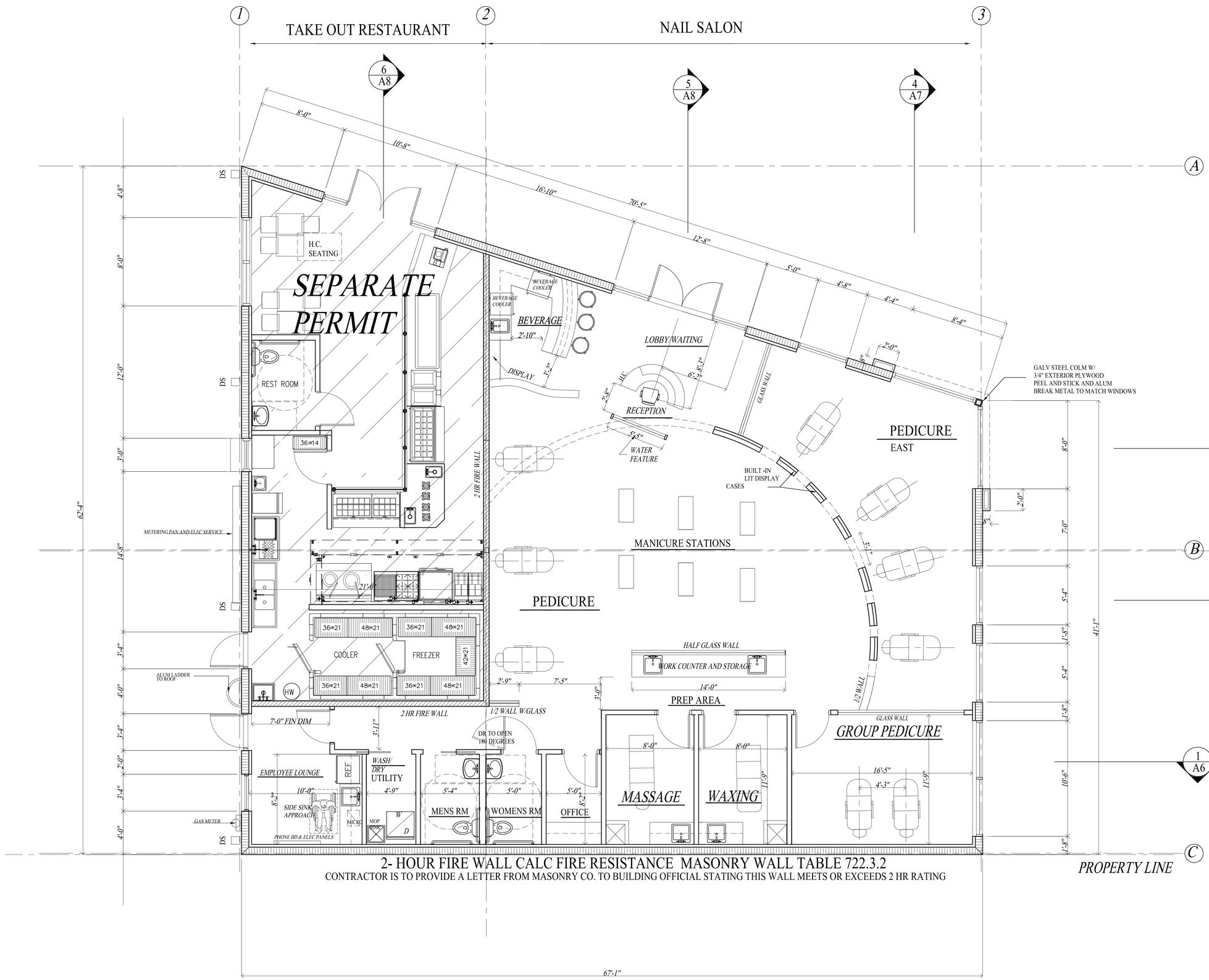

2- HOUR FIRE WALL CALC FIRE RESISTANCE MASONRY WALL TABLE 722.3.2

CONTRACTOR IS TO PROVIDE A LETTER FROM MASONRY CO. TO BUILDING OFFICIAL STATING THIS WALL MEETS OR EXCEEDS 2 HR RATING

NOTES:

1. ALL DRYWALL, FURRING AND FOAM SPRAY INSULATION IS TO RUN FULL HT UP TO ROOF DECK
2. SEE DWG A.1.1 FOR INTERIOR DIMENSION PLAN
3. SEE ELECTRICAL DWGS FOR ADD ALTERNATE ELECTRIC HAND DRYER BY DYSON . CONTRACTOR TO PRICE MODEL # AB14 - GRAY

ARCHITECTS SEAL

DNA ARCHITECTS , LLC.
415 S BABCOCK ST MELBOURNE FL 32901
3217279096 FAX 3217270810
dnadav@aol.com
AR0015738 WWW.DNA-ARCHITECTS.COM

THESE PLANS ARE AN INSTRUMENT OF SERVICE AND ARE THE PROPERTY OF THE ARCHITECT.INFRINGEMENTS WILL BE PROSECUTED.

DNA

PROJECT: NEW BUILDING FOR: TIFFANY NAILS & SPA AIA INDIALANTIC FL

DRAWING

FLOOR PLAN/FURNITURE

DATE: 2.15.21 DRAWN BY: DN
SCALE: 1/4"=1'-0" CHECKED BY:

A.1.1

REV	DATE	DESCRIPTION	BY

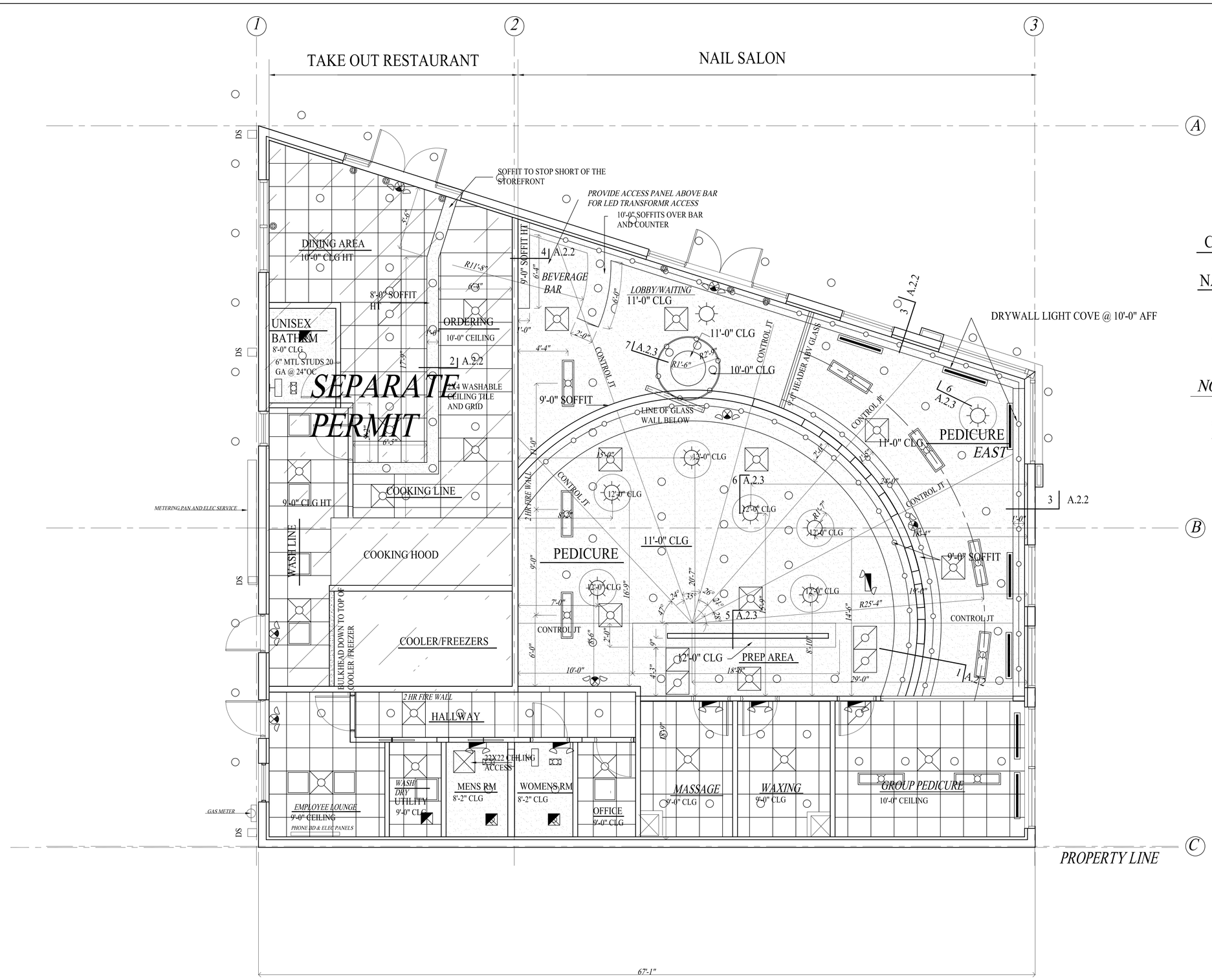

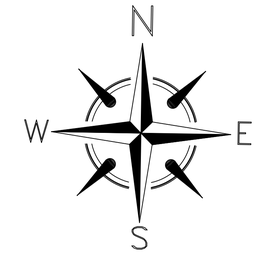

CEILING TILE AND GRID :

BY ARMSTRONG CEILING TILE

NAIL SALON:

BREAK ROOM,UTILITY CLOS,OFFICEL,HALLWAY
MASSAGE , WAXING, AND GROUG PEDICURE:
704 CORTEGA 2X2X5/8" TEGULAR IN 15/16" GRID

NOTES:

CONTRACTOR IS TO PRICE 6- 22X22 DRYWALL ACCESS PANELS . FINAL LOCATIONS TBD

ARCHITECTS SEAL

DNA ARCHITECTS , LLC.
415 S BABCOCK ST MELBOURNE FL 32901
3217279096 FAX 3217270810
dnadav@aol.com
AR0015738 WWW.DNA-ARCHITECTS.COM

THESE PLANS ARE AN INSTRUMENT OF SERVICE AND ARE THE PROPERTY OF THE ARCHITECT.INFRINGEMENTS WILL BE PROSECUTED.

DNA

PROJECT: NEW BUILDING FOR:
TIFFANY NAILS & SPA
AIA INDIALANTIC FL

DRAWING

CEILING PLAN

DATE: 2.15.21 DRAWN BY: DN
SCALE: 1/4"=1'-0" CHECKED BY:

A.2

REV	DATE	DESCRIPTION	BY

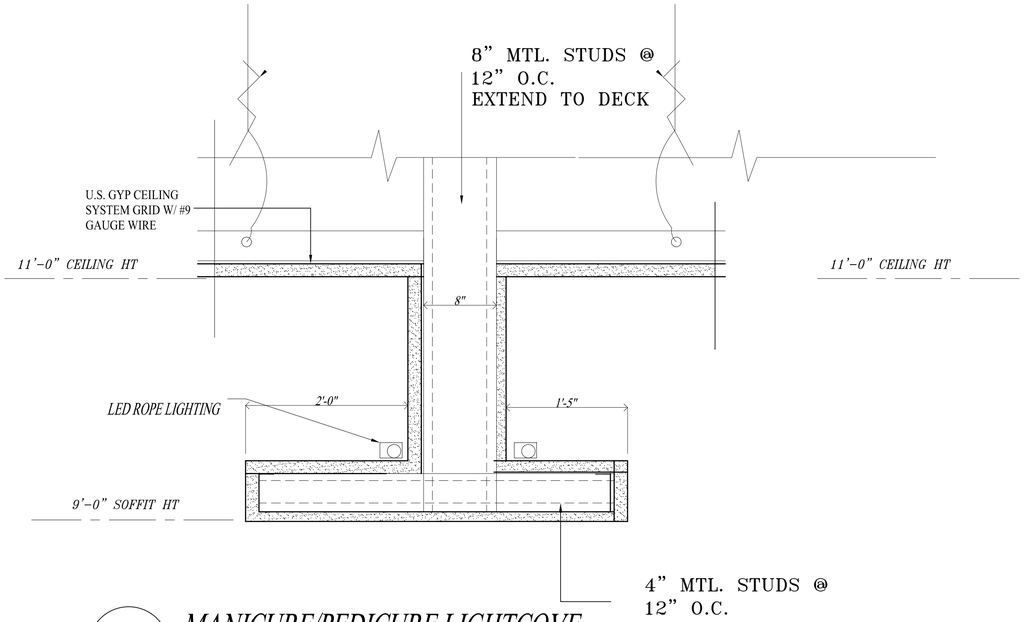

1 MANICURE/PEDICURE LIGHTCOVE

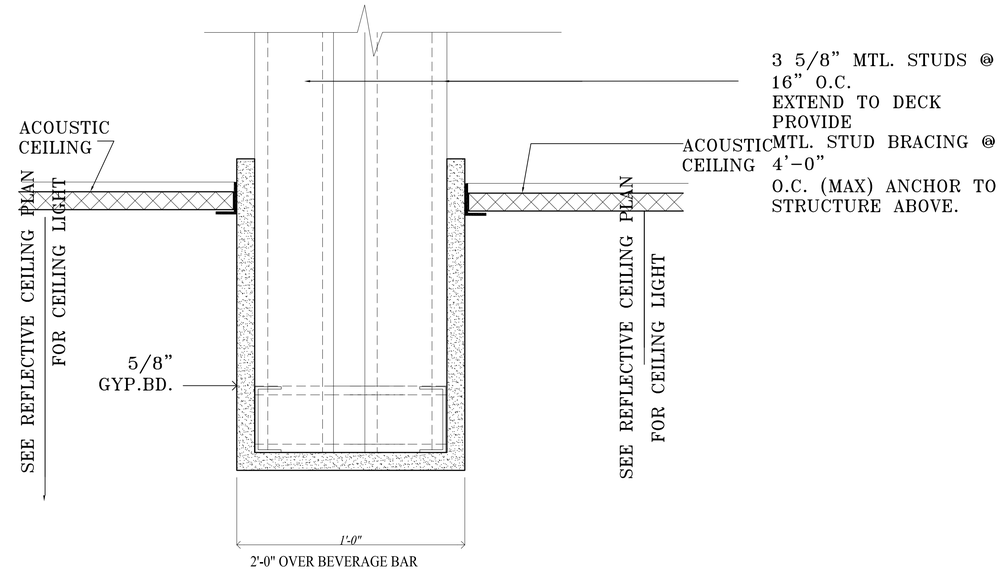

2 TYPICAL SOFFIT DETAIL

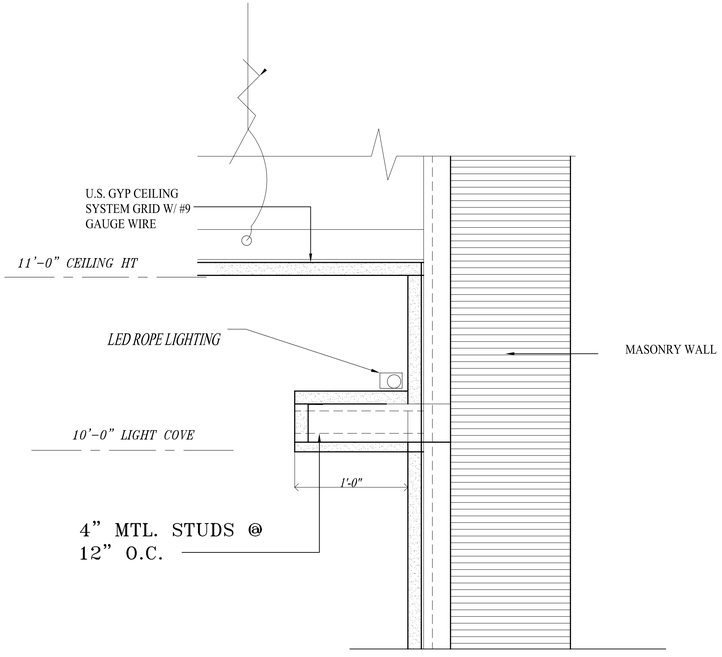

3 LIGHTCOVE @ PERIMTER WALL

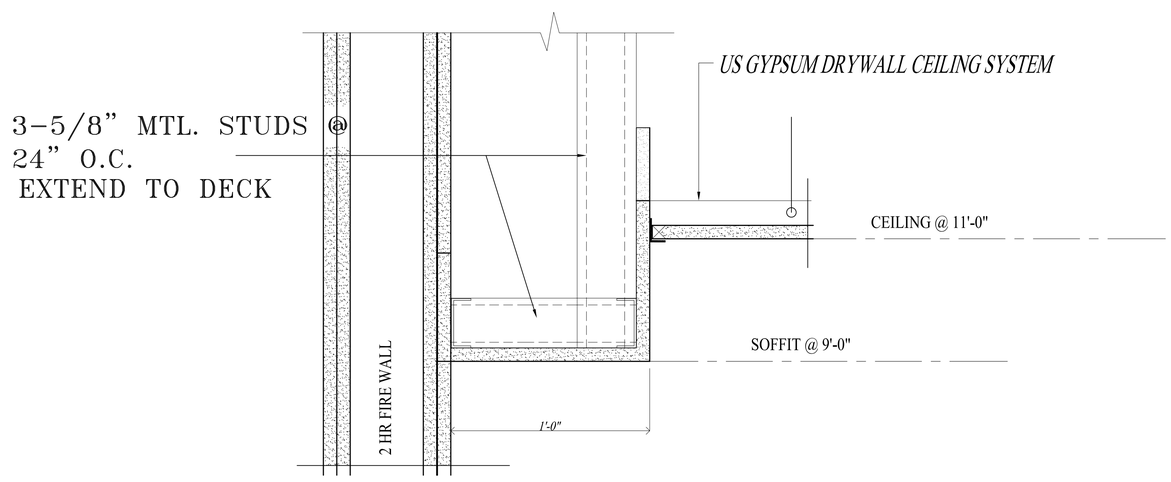

4 TYPICAL SOFFIT DETAIL @ BACK BAR

ARCHITECTS SEAL

DNA ARCHITECTS , LLC.
415 S BABCOCK ST MELBOURNE FL 32901
3217279096 FAX 3217270810
dnadav@aol.com
AR0015738 WWW.DNA-ARCHITECTS.COM

THESE PLANS ARE AN INSTRUMENT OF SERVICE AND ARE THE PROPERTY OF THE ARCHITECT.INFRINGEMENTS WILL BE PROSECUTED.

DNA

PROJECT: NEW BUILDING FOR:
TIFFANY NAILS & SPA
AIA INDIALANTIC FL

DRAWING

CEILING DETAILS

DATE: 2.15.21 DRAWN BY: DN
SCALE: NTS CHECKED BY:

A.2.2

REV	DATE	DESCRIPTION	BY

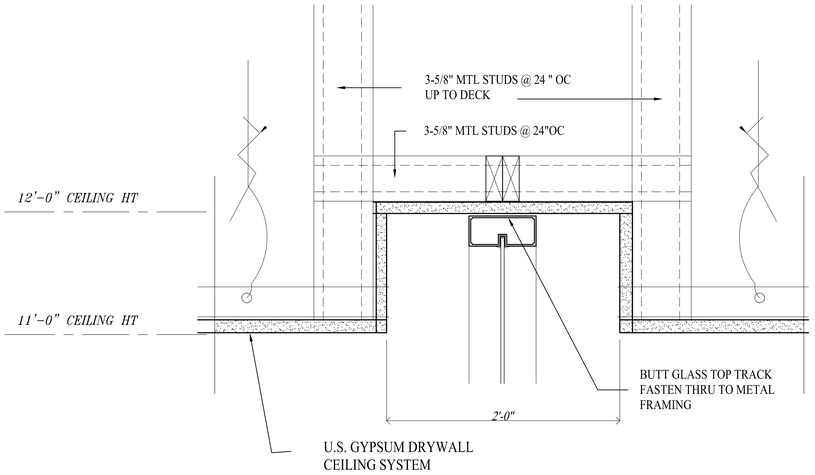

5 CEILING RECESS BY PREP GLASS

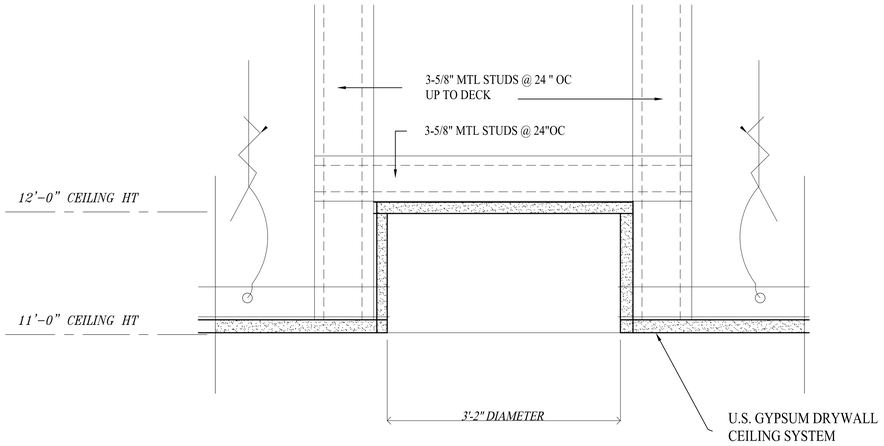

6 CEILING RECESS FOR FIXTURE TYPE-

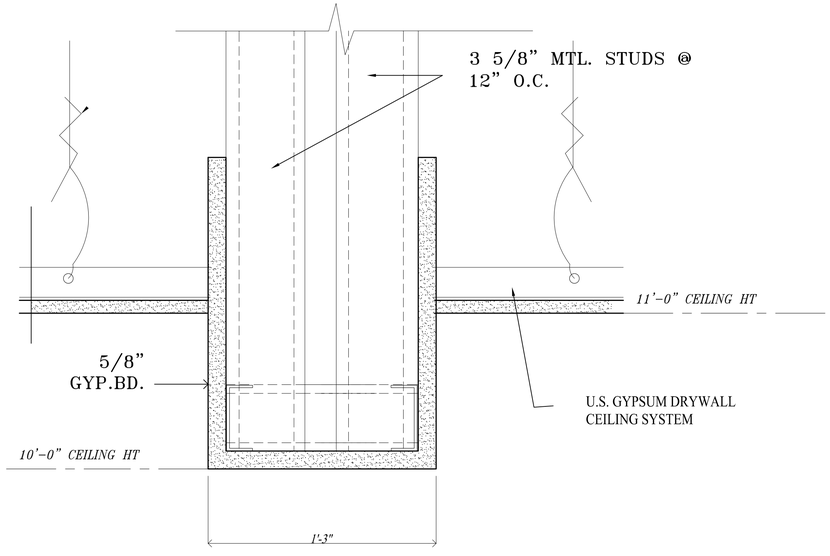

7 SOFFIT OVER RECEPTION DESK

ARCHITECTS SEAL

DNA ARCHITECTS , LLC.
415 S BABCOCK ST MELBOURNE FL 32901
3217279096 FAX 3217270810
dnadav@aol.com
AR0015738 WWW.DNA-ARCHITECTS.COM

THESE PLANS ARE AN INSTRUMENT OF SERVICE AND ARE THE PROPERTY OF THE ARCHITECT.INFRINGEMENTS WILL BE PROSECUTED.

DNA

PROJECT: NEW BUILDING FOR:
TIFFANY NAILS & SPA
AIA INDIALANTIC FL

DRAWING

CEILING DETAILS

DATE: 2.15.21 DRAWN BY: DN
SCALE: NTS CHECKED BY:

A.2.3

REV	DATE	DESCRIPTION	BY

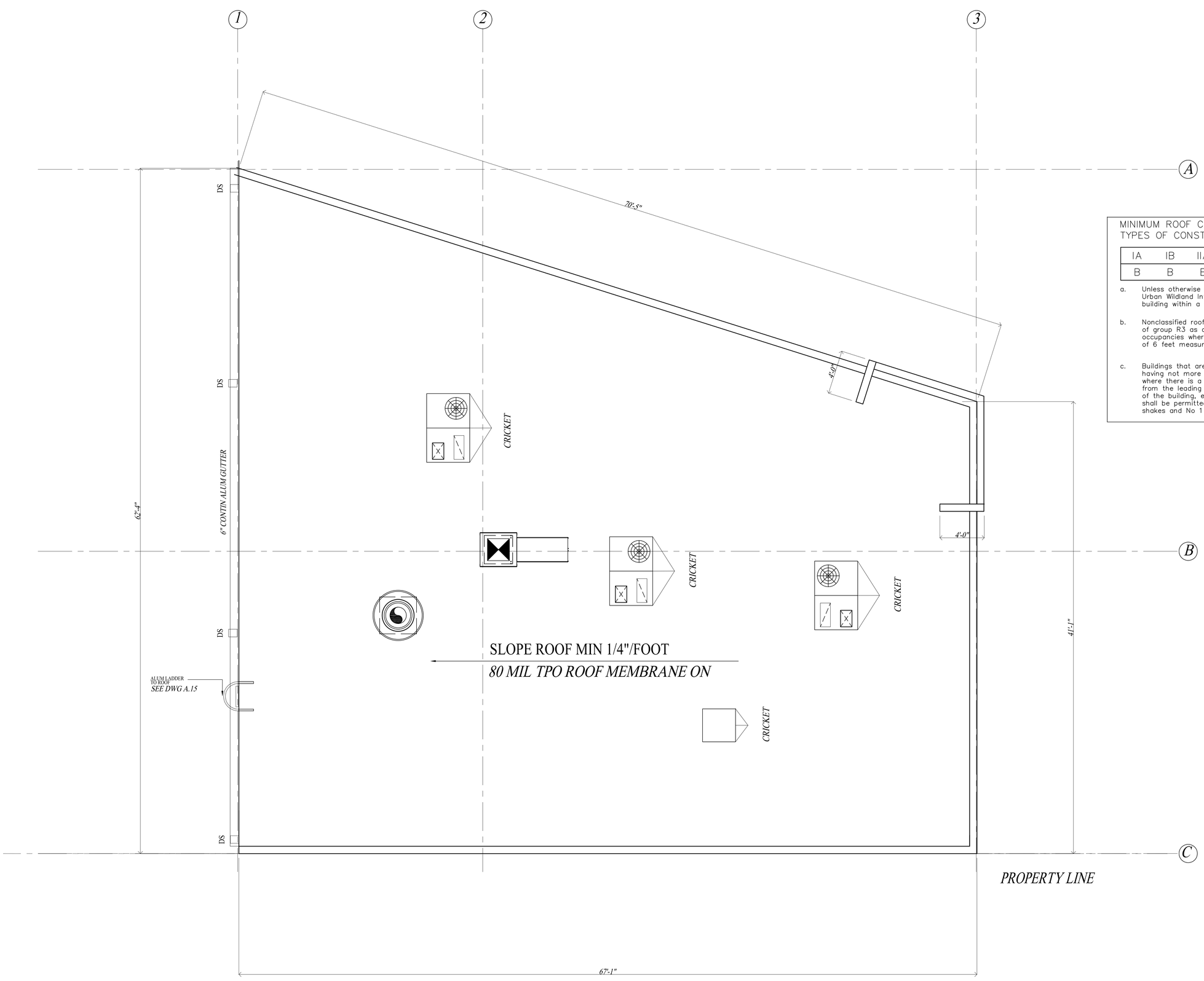

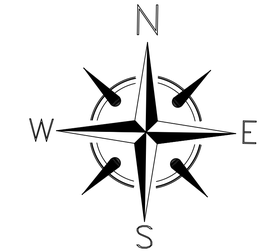

MINIMUM ROOF COVERING CLASSIFICATION FOR TYPES OF CONSTRUCTION PER FBC TABLE 1505.1 [a,b]

IA	IB	IIA	IIB	IIIA	IIIB	IV	VA	VB
B	B	B	C[c]	B	C[c]	B	B	C[c]

a. Unless otherwise required in accordance with the International Urban Wildland Interface Code or due to the location of the building within a fire district.

b. Nonclassified roof coverings shall be permitted on buildings of group R3 as applicable in Section 101.2, and group U occupancies where there is a minimum fire separation distance of 6 feet measured from the leading edge of the roof.

c. Buildings that are not more than 2 stories in height and having not more than 6000 sq. ft. of projected roof area and where there is a minimum 10 foot fire separation distance from the leading edge of the roof to a lot line on all sides of the building, except for street fronts or public ways, shall be permitted to have roofs of No 1 Cedar or Redwood shakes and No 1 shingles.

ARCHITECTS SEAL

DNA ARCHITECTS , LLC.
415 S BABCOCK ST MELBOURNE FL 32901
3217279096 FAX 3217270810
dnadav@aol.com
AR0015738 WWW.DNA-ARCHITECTS.COM

THESE PLANS ARE AN INSTRUMENT OF SERVICE AND ARE THE PROPERTY OF THE ARCHITECT.INFRINGEMENTS WILL BE PROSECUTED.

DNA

PROJECT: NEW BUILDING FOR:
TIFFANY NAILS & SPA
AIA INDIALANTIC FL

DRAWING

ROOF PLAN

DATE: 2.15.21 DRAWN BY: DN
SCALE: 1/4"=1'-0" CHECKED BY:

A.3

REV	DATE	DESCRIPTION	BY

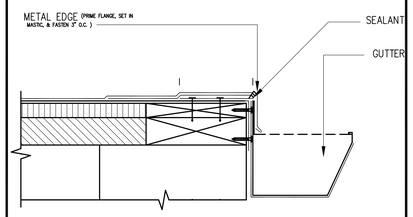

GUTTER EDGE

DETAIL 1

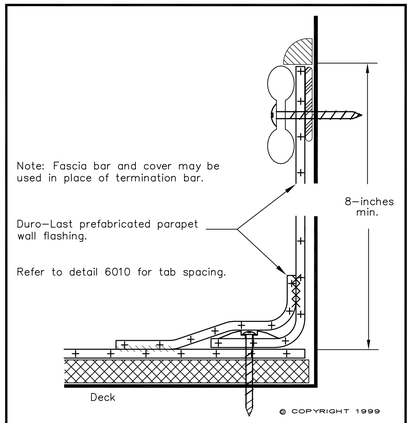

DETAIL 2

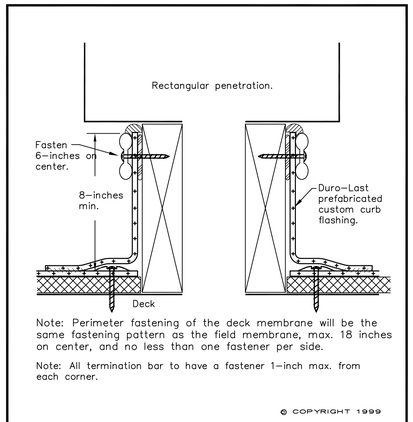

DETAIL 3

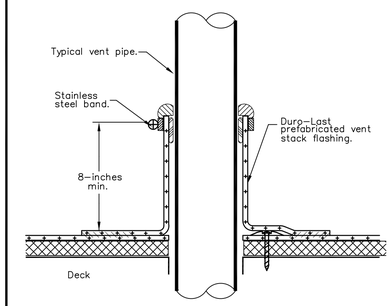

DETAIL 4

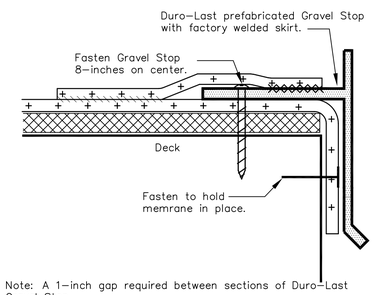

DETAIL 5

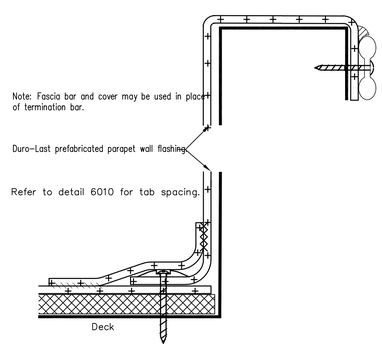

DETAIL 6

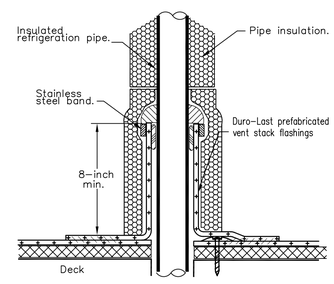

DETAIL 7

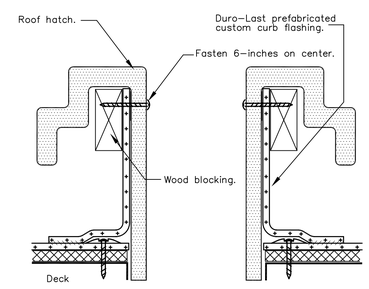

DETAIL 8

ARCHITECTS SEAL

DNA ARCHITECTS , LLC.
415 S BABCOCK ST MELBOURNE FL 32901
3217279096 FAX 3217270810
dnadav@aol.com
AR0015738 WWW.DNA-ARCHITECTS.COM

THESE PLANS ARE AN INSTRUMENT OF SERVICE AND ARE THE PROPERTY OF THE ARCHITECT.INFRINGEMENTS WILL BE PROSECUTED.

DNA

PROJECT: NEW BUILDING FOR:
TIFFANY NAILS & SPA
AIA INDIALANTIC FL

DRAWING

ROOF DETAILS

DATE: 2.15.21 DRAWN BY: DN
SCALE: CHECKED BY:

A.3.1

REV	DATE	DESCRIPTION	BY

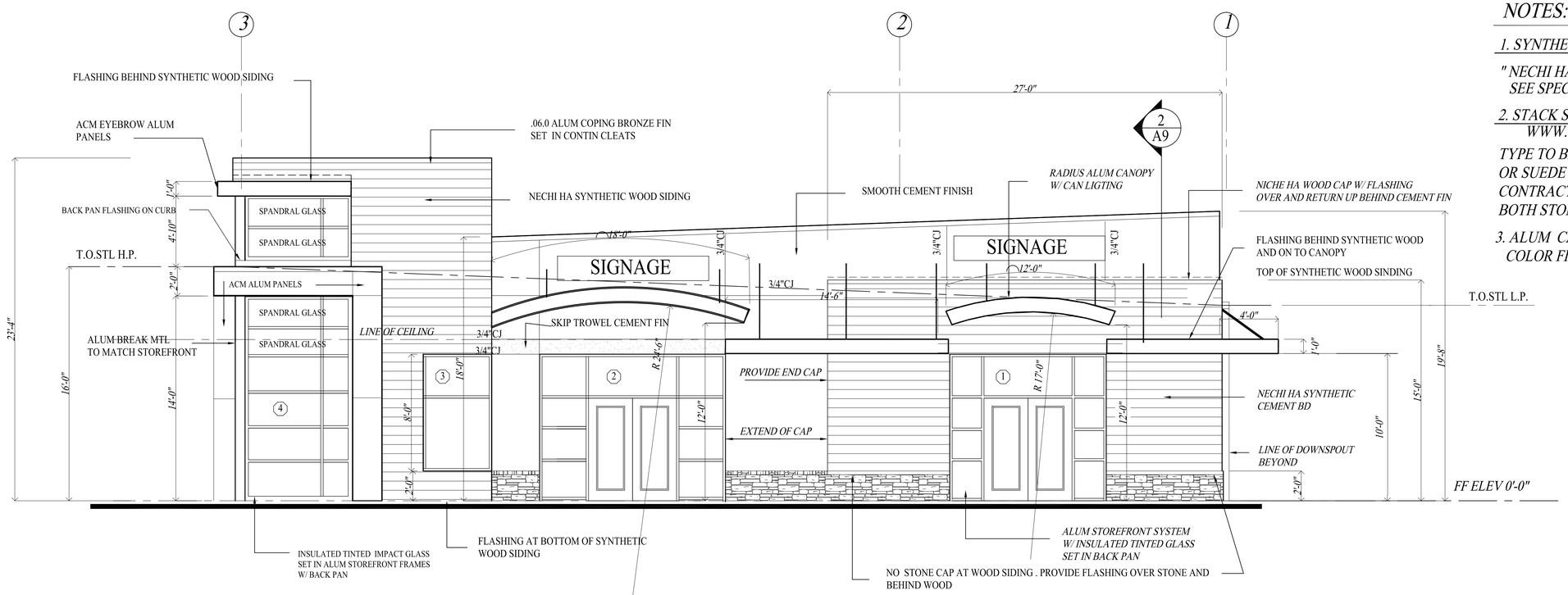

NORTH ELEVATION

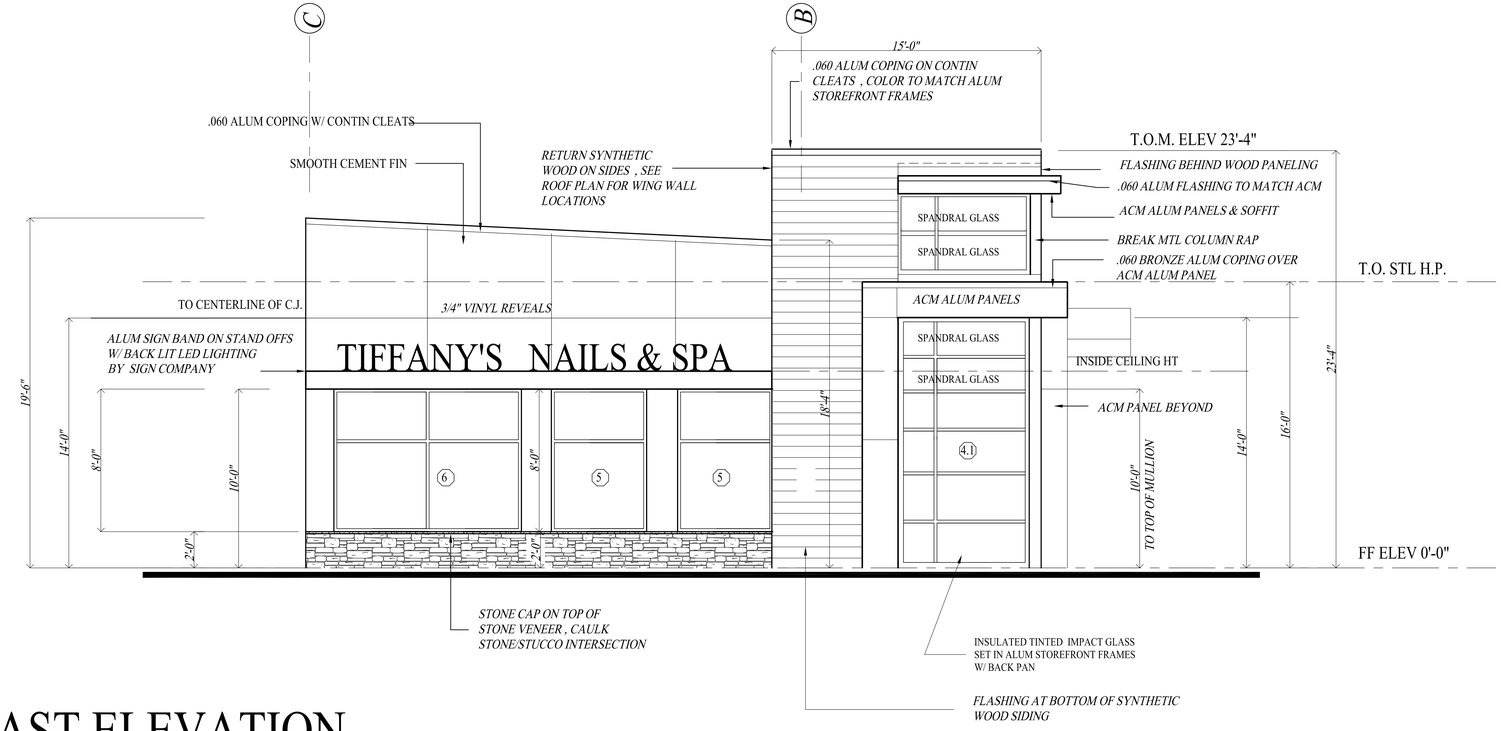

EAST ELEVATION

NOTES:

1. SYNTHETIC WOOD SIDING BY:

" NECHI HA " FIBER CEMENT SIDING
SEE SPECS FOR PROPER INSTALLATION

2. STACK STONE BY: CENTURION OR EQUAL
WWW.CENTURIONSTONE.COM

TYPE TO BE : PENNSYLVANIA # 10080025
OR SUEDE # 10018565.
CONTRACTOR TO PROVE SAMPLES OF BOTH STONE COLORS

3. ALUM CANOPIES TO HAVE A "PUTTY" COLOR FINISH. FINAL COLR TBD

ARCHITECTS SEAL

DNA ARCHITECTS , LLC.
415 S BABCOCK ST MELBOURNE FL 32901
3217279096 FAX 3217270810
dnadav@aol.com
AR0015738 WWW.DNA–ARCHITECTS.COM

THESE PLANS ARE AN INSTRUMENT OF SERVICE AND ARE THE PROPERTY OF THE ARCHITECT.INFRINGEMENTS WILL BE PROSECUTED.

DNA

PROJECT: NEW BUILDING FOR:
TIFFANY NAILS
AIA INDIALANTIC FL

DRAWING

ELEVATIONS

DATE: 2.15.21 DRAWN BY: DN
SCALE: 1/4"=1'-0" CHECKED BY:

A.4

REV	DATE	DESCRIPTION	BY

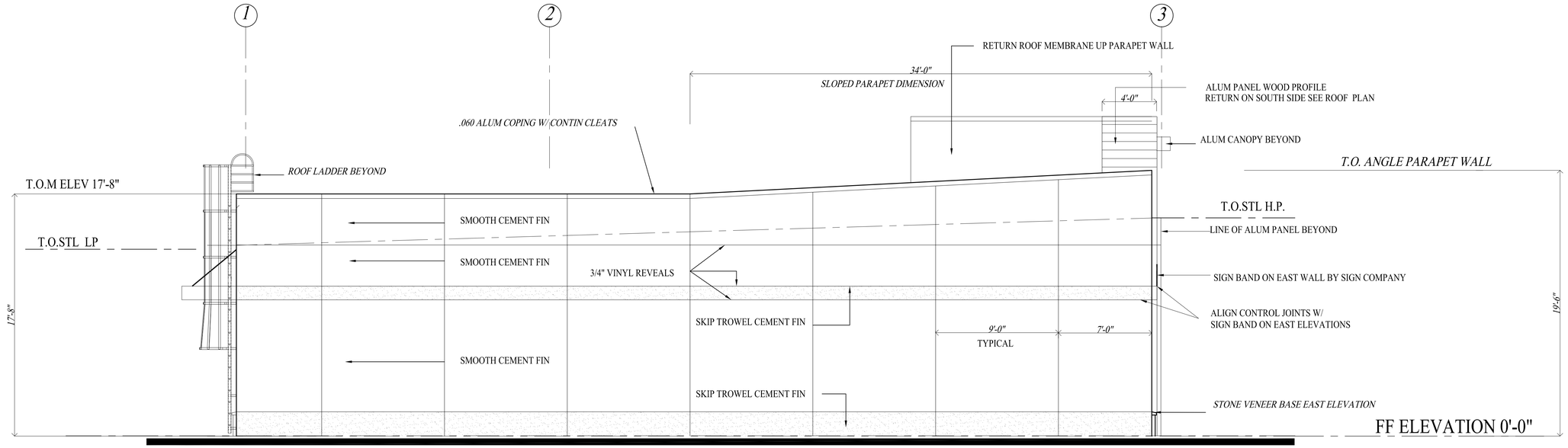

SOUTH ELEVATION

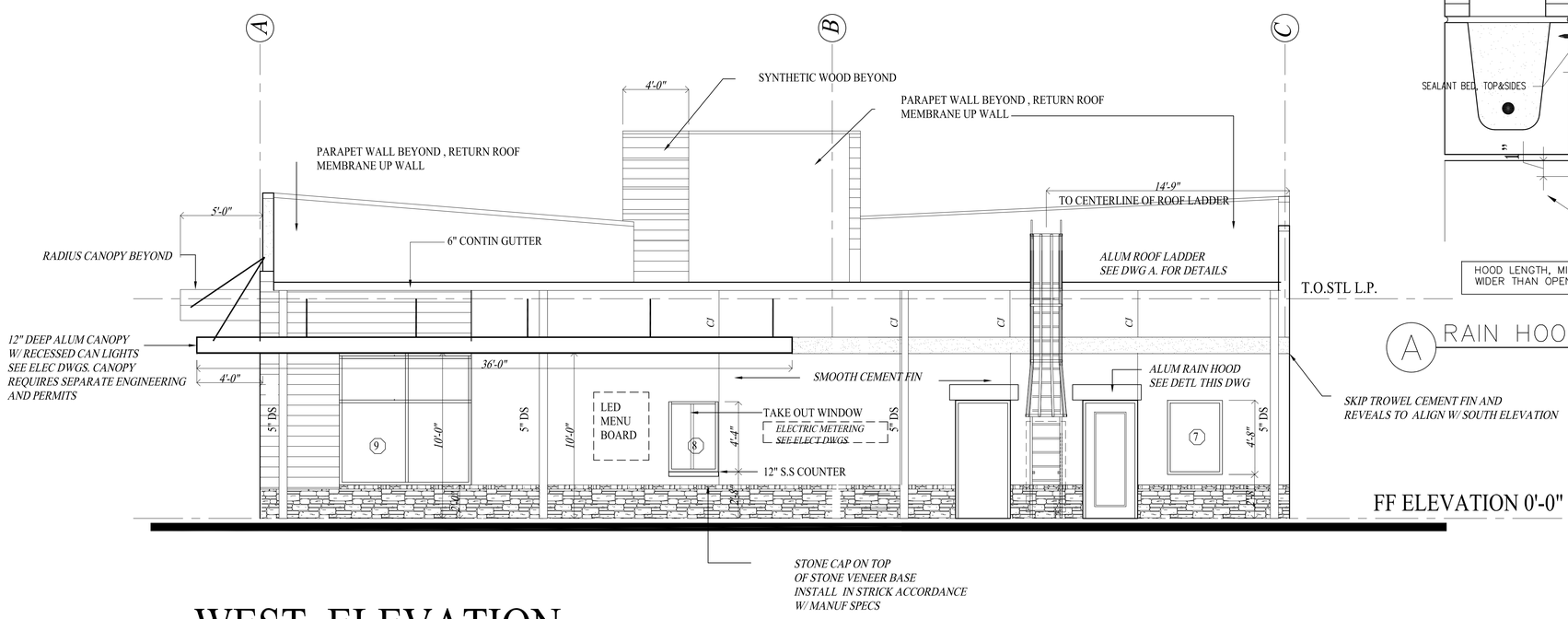

WEST ELEVATION

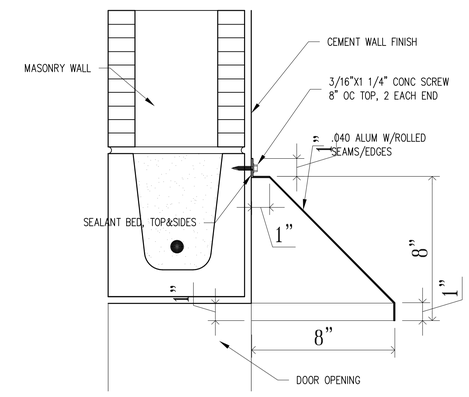

A RAIN HOOD DETAIL
NTS

ARCHITECTS SEAL

DNA ARCHITECTS , LLC.
415 S BABCOCK ST MELBOURNE FL 32901
3217279096 FAX 3217270810
dnadav@aol.com
AR0015738 WWW.DNA-ARCHITECTS.COM

THESE PLANS ARE AN INSTRUMENT OF SERVICE AND ARE THE PROPERTY OF THE ARCHITECT.INFRINGEMENTS WILL BE PROSECUTED.

DNA

PROJECT: NEW BUILDING FOR:
TIFFANY NAILS & SPA
AIA INDIALANTIC FL

DRAWING

ELEVATIONS

DATE: 2.15.21 DRAWN BY: DN
SCALE: 1/4"=1'-0" CHECKED BY:

A.5

REV	DATE	DESCRIPTION	BY

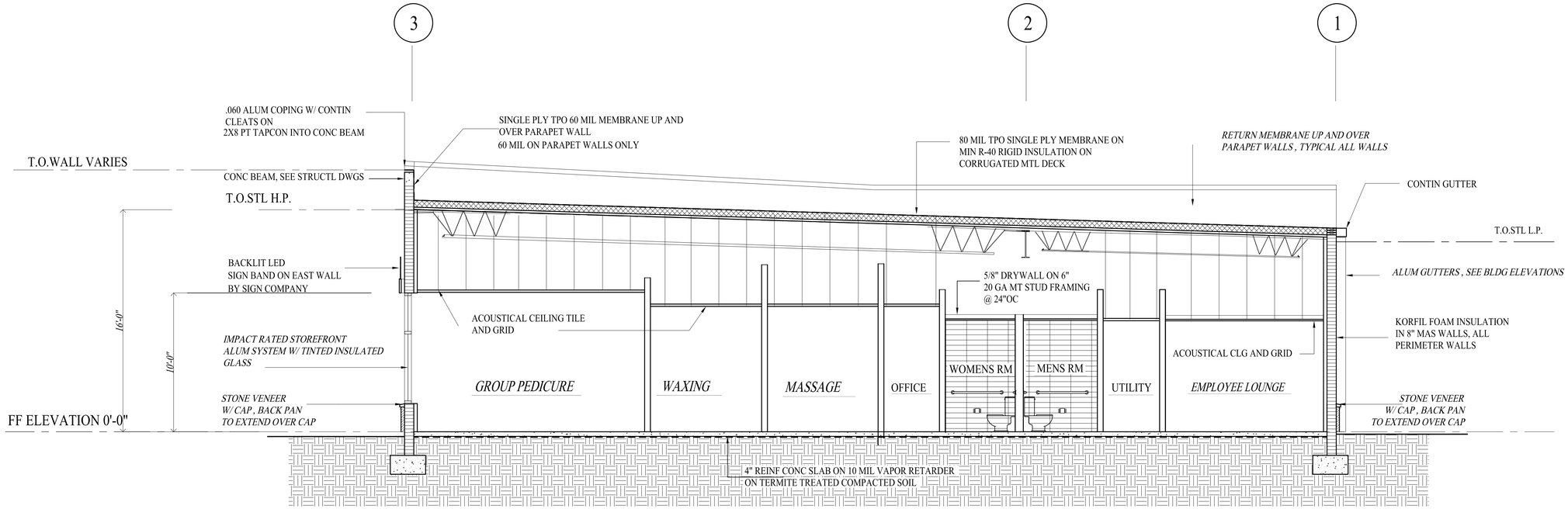

SECTION 1-1

NOTE: ALL INSULATION, FURRING AND MOLD RESISTANT DRYWALL IS TO RUN FULL HT UP TO ROOF DECK

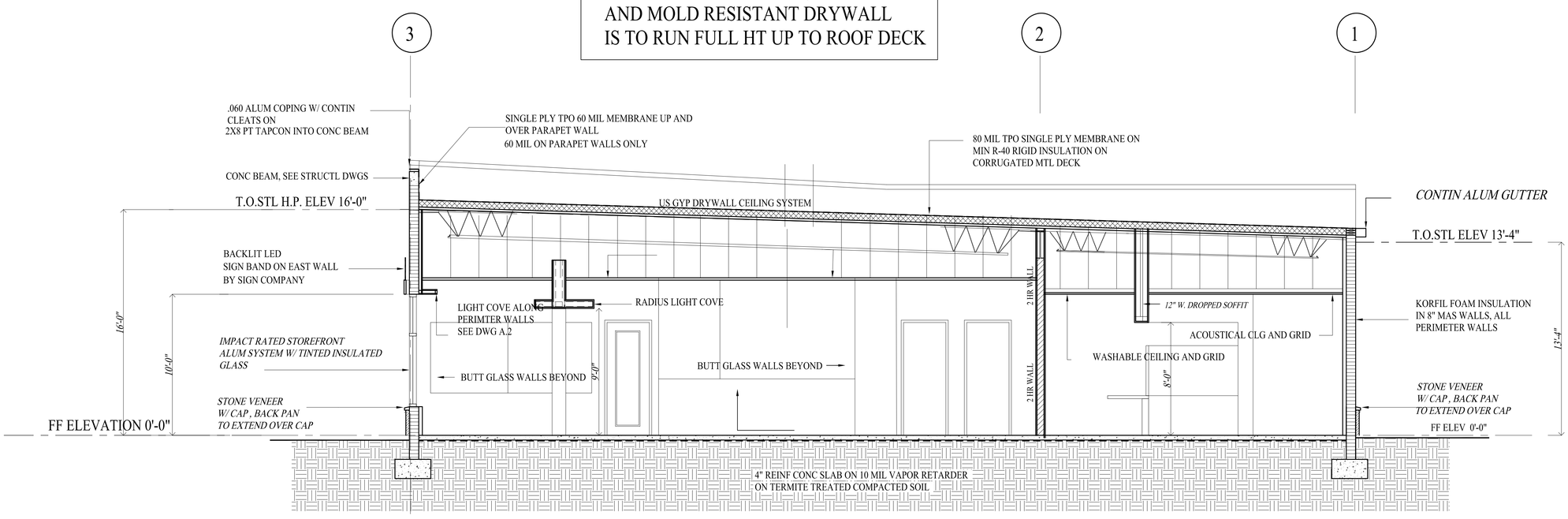

SECTION 2-2

ARCHITECTS SEAL

DNA ARCHITECTS , LLC.
415 S BABCOCK ST MELBOURNE FL 32901
3217279096 FAX 3217270810
dnadav@aol.com
AR0015738 WWW.DNA-ARCHITECTS.COM

THESE PLANS ARE AN INSTRUMENT OF SERVICE AND ARE THE PROPERTY OF THE ARCHITECT.INFRINGEMENTS WILL BE PROSECUTED.

DNA

PROJECT: NEW BUILDING FOR: TIFFANY NAILS & SPA AIA INDIALANTIC FL

DRAWING

BUILDING SECTIONS

DATE: 2.15.21 DRAWN BY: DN
SCALE: 1/4"=1'-0" CHECKED BY:

A.6

REV	DATE	DESCRIPTION	BY

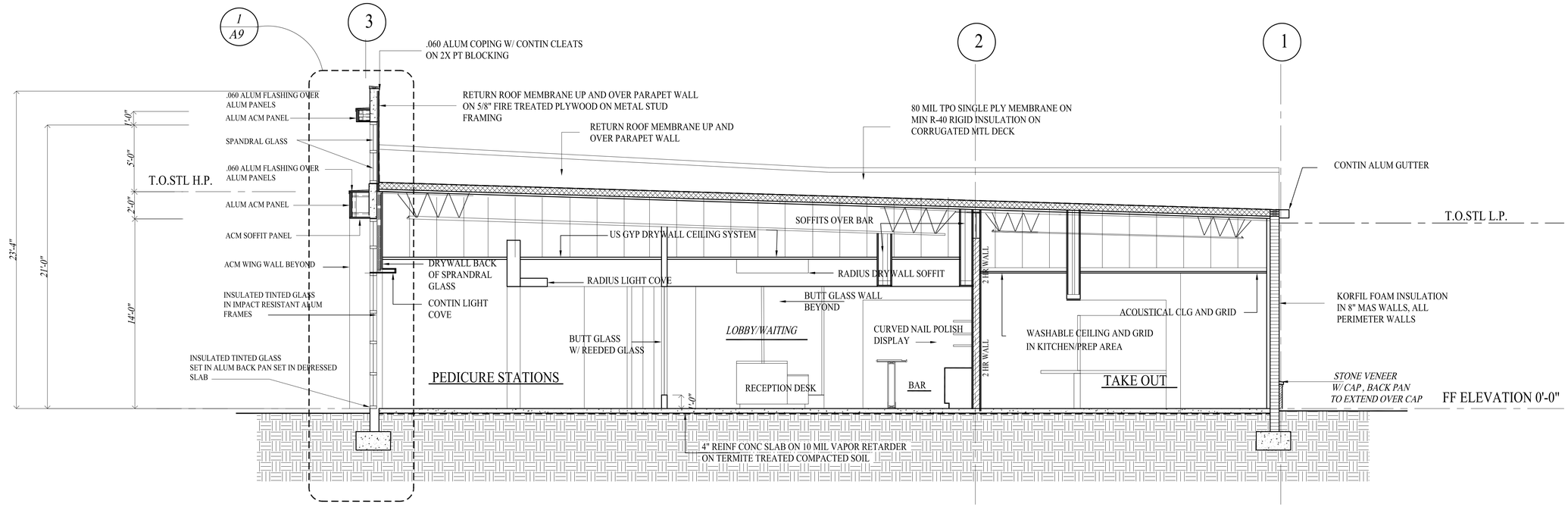

SECTION 3-3

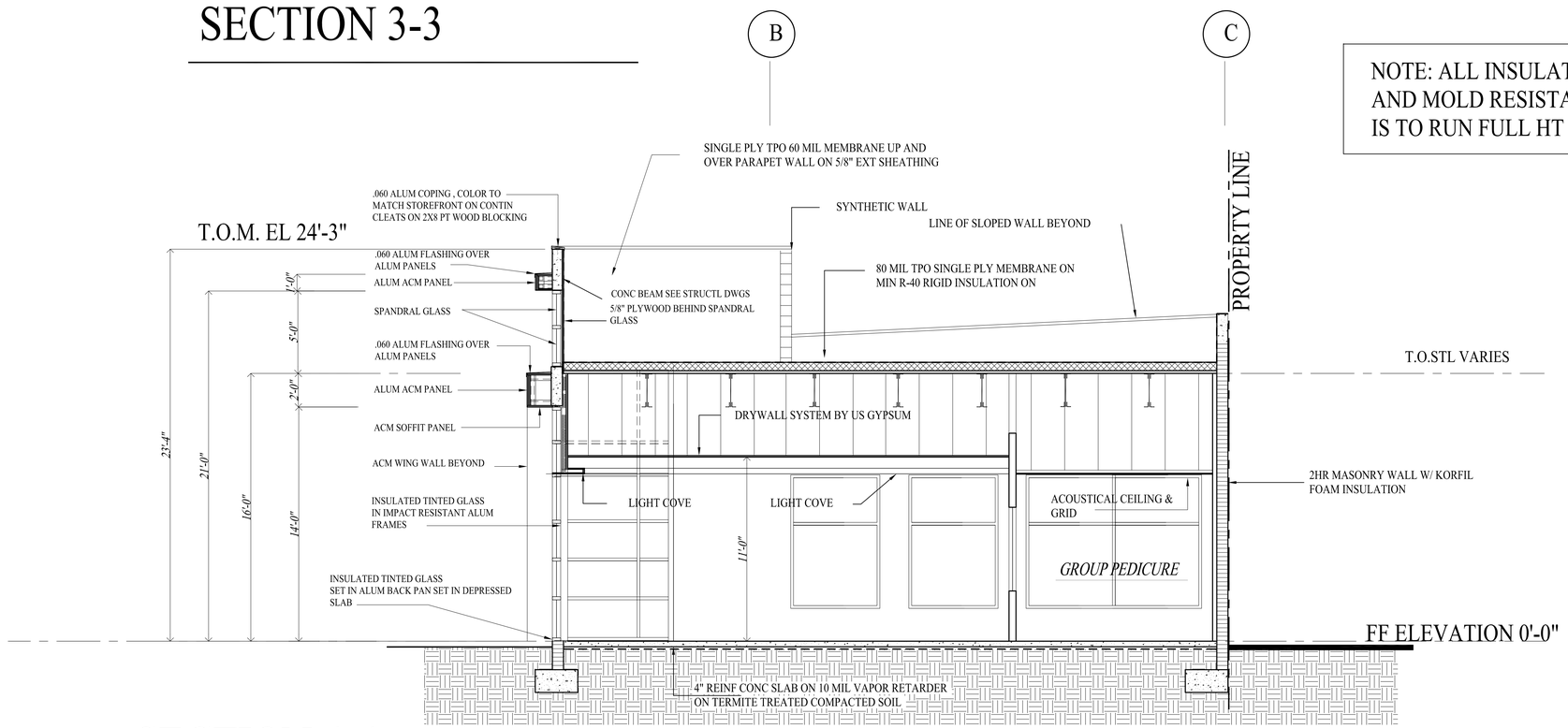

SECTION 4-4

NOTE: ALL INSULATION, FURRING AND MOLD RESISTANT DRYWALL IS TO RUN FULL HT UP TO ROOF DECK

ARCHITECTS SEAL

DNA ARCHITECTS , LLC.
415 S BABCOCK ST MELBOURNE FL 32901
3217279096 FAX 3217270810
dnadav@aol.com
AR0015738 WWW.DNA-ARCHITECTS.COM

THESE PLANS ARE AN INSTRUMENT OF SERVICE AND ARE THE PROPERTY OF THE ARCHITECT.INFRINGEMENTS WILL BE PROSECUTED.

DNA

PROJECT: NEW BUILDING FOR: TIFFANY NAILS & SPA AIA INDIALANTIC FL

DRAWING

BUILDING SECTIONS

DATE: 2.15.21 DRAWN BY: DN
SCALE: 1/4"=1'-0" CHECKED BY:

A.7

REV	DATE	DESCRIPTION	BY

NOTE: ALL INSULATION, FURRING AND MOLD RESISTANT DRYWALL IS TO RUN FULL HT UP TO ROOF DECK

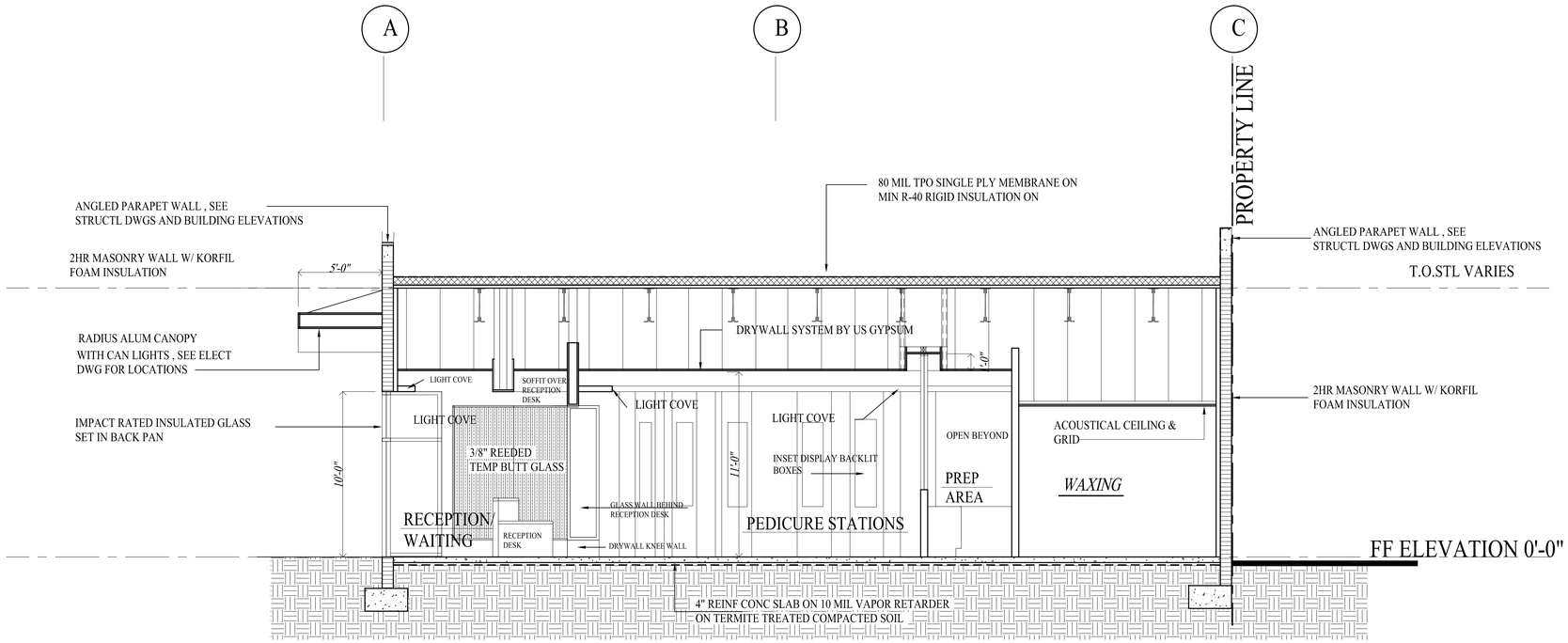

SECTION 5-5

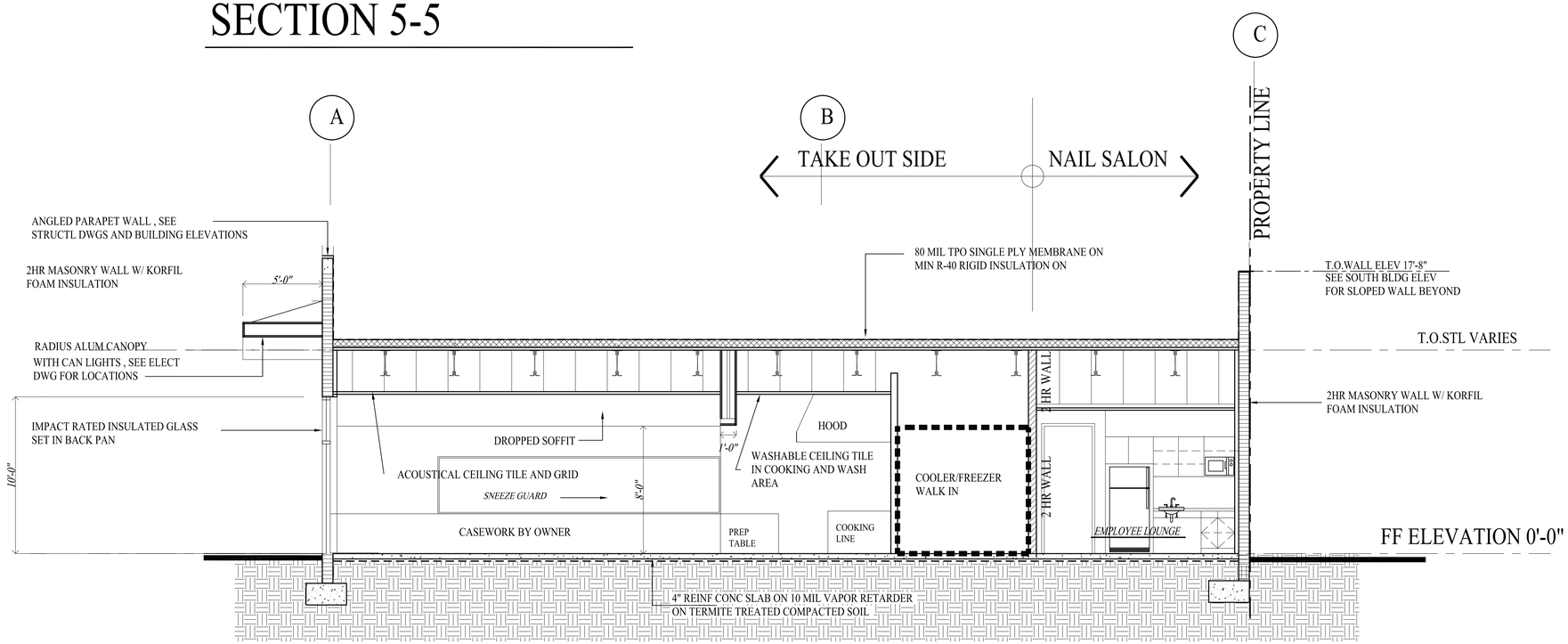

SECTION 6-6

ARCHITECTS SEAL

DNA ARCHITECTS , LLC.
415 S BABCOCK ST MELBOURNE FL 32901
3217279096 FAX 3217270810
dnadav@aol.com
AR0015738 WWW.DNA-ARCHITECTS.COM

THESE PLANS ARE AN INSTRUMENT OF SERVICE AND ARE THE PROPERTY OF THE ARCHITECT.INFRINGEMENTS WILL BE PROSECUTED.

DNA

PROJECT: NEW BUILDING FOR: TIFFANY NAILS & SPA AIA INDIALANTIC FL

DRAWING

BUILDING SECTIONS

DATE: 2.15.21 DRAWN BY: DN
SCALE: 1/4"=1'-0" CHECKED BY:

A.8

REV	DATE	DESCRIPTION	BY

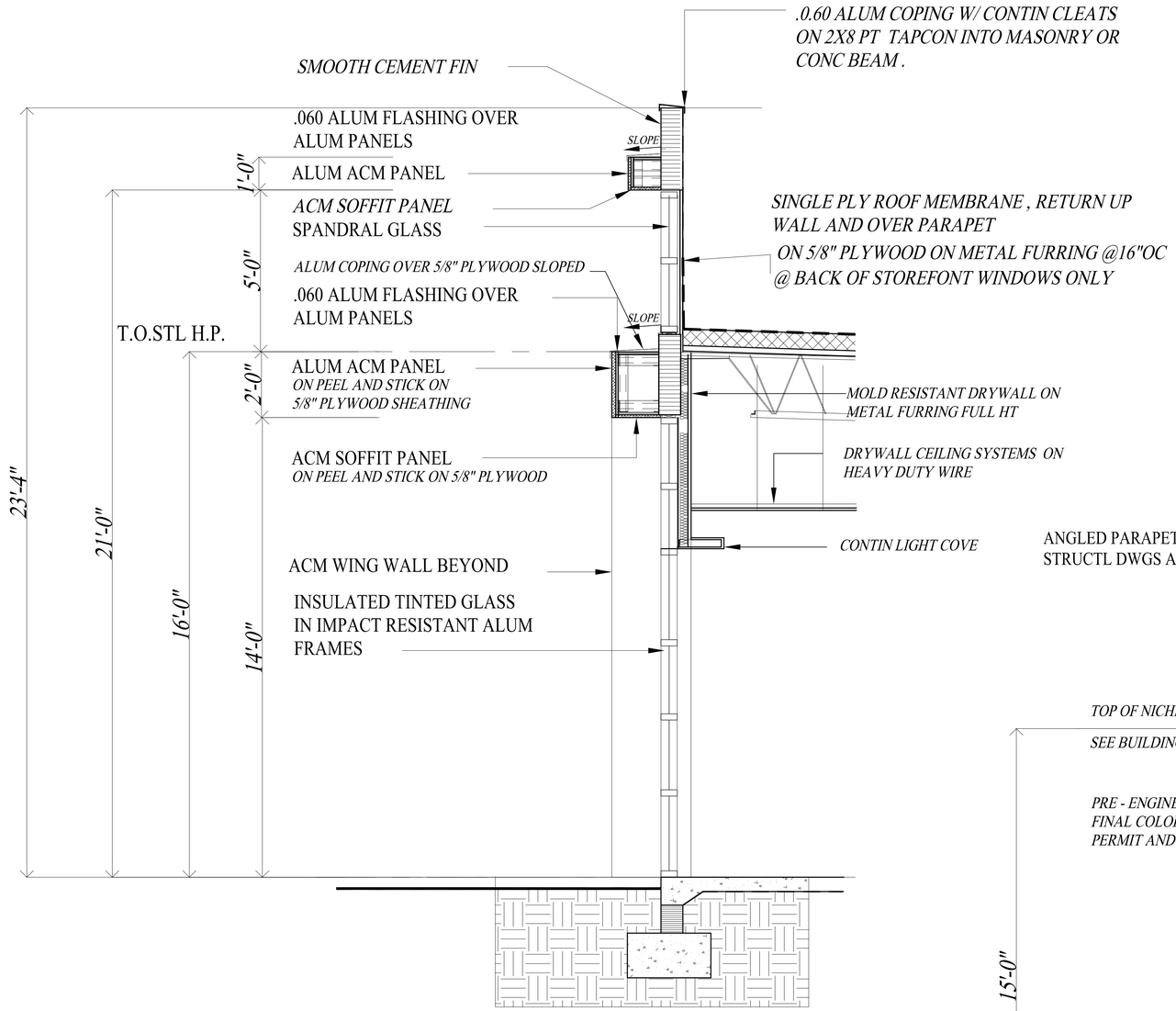

SECTION 1

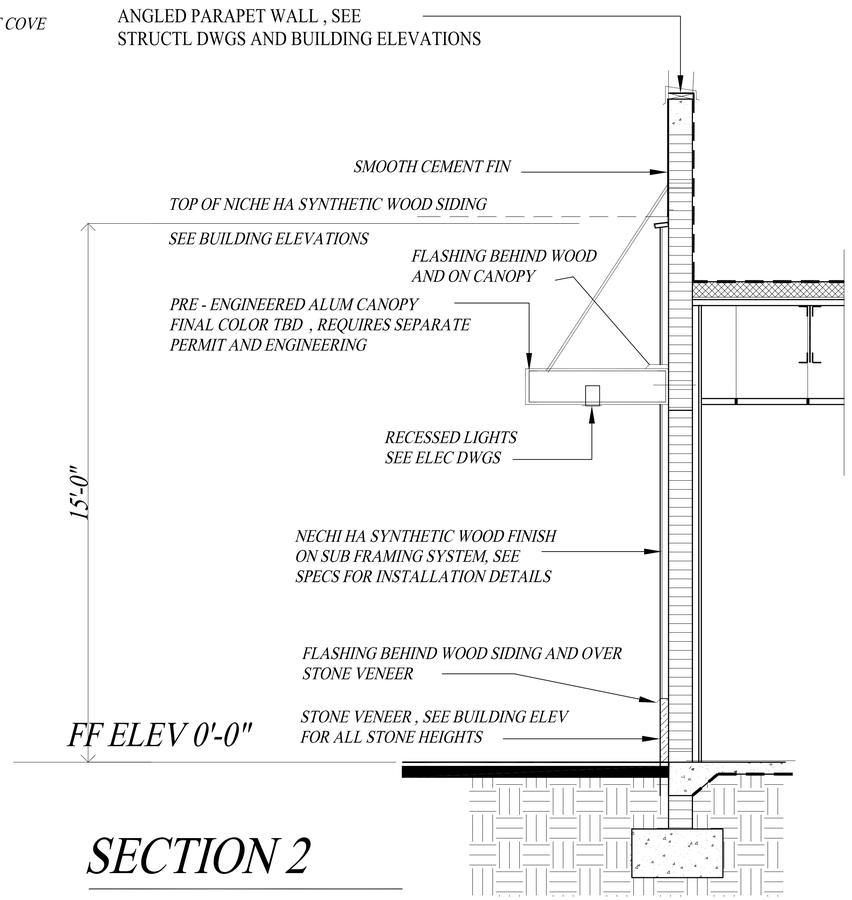

SECTION 2

ARCHITECTS SEAL

DNA ARCHITECTS , LLC.
415 S BABCOCK ST MELBOURNE FL 32901
3217279096 FAX 3217270810
dnadav@aol.com
AR0015738 WWW.DNA-ARCHITECTS.COM

THESE PLANS ARE AN INSTRUMENT OF SERVICE AND ARE THE PROPERTY OF THE ARCHITECT.INFRINGEMENTS WILL BE PROSECUTED.

DNA

PROJECT: NEW BUILDING FOR: TIFFANY NAILS & SPA AIA INDIALANTIC FL

DRAWING

WALL SECTIONS

DATE: 2.15.21 DRAWN BY: DN
SCALE: 1/2"=1'-0" CHECKED BY:

A.9

REV	DATE	DESCRIPTION	BY

NOTE: ALL PERIMETER FRAMING, INSULATION AND DRYWALL TO RUN UP TO ROOF DECK OR UNDERSIDE OF WOOD TRUSSES

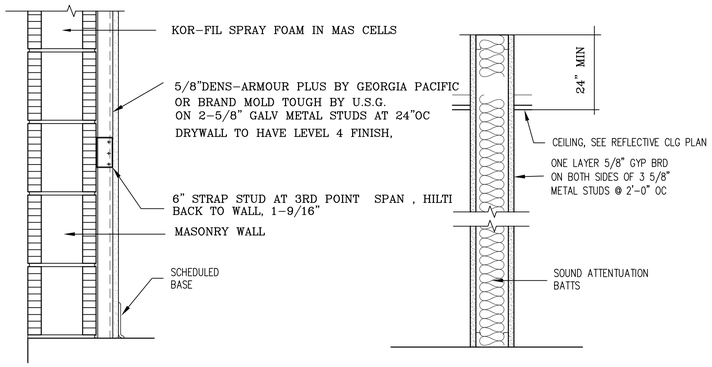

1 EXTERIOR MASONRY WALL

2 USE DENSSHIELD TILE BACKER BRD IN WET LOCATIONS SEE FRAMING CHART THIS SHEET FOR STUD SIZE AND GAUGES .

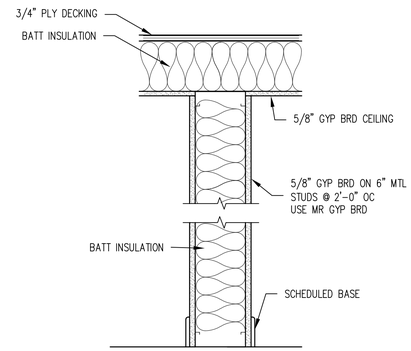

3 6" METAL STUD WALL PLUMBING WALL

SEE STRUCTURAL DWGS FOR PLATFORM FRAMING AND VERTICAL STUD SIZES AND GAUGES

USE DENSSHIELD TILE BACKER BRD IN WET LOCATIONS

1A 2HR RATED MASONRY WALL BASED ON FBC TABLE 722.3.2 CONTRACTOR TO PROVIDE LETTER TO BLDG OFFICIAL FROM MASONRY CO.

1B PROVIDE 5/8" CEMENT BOARD FULL HT ALONG WARE WASHING STATION WEST WALL OF BUILDING IN KITCHEN

1C 5/8" MOLD RESISTANT DRYWALL ON 4" GALV MTL STUDS @ 24"OC

NOTE: THE FIRE WALL ABOVE THE CEILING SHALL BE IDENTIFIED ; "FIRE AND SMOKE BARRIER-PROTECT ALL OPENINGS" PER LIFE SAFETY CODE 101 SECTION 8.3.2.4

DensArmor Plus Specifications

Part 1 – General

1.1 Manufacturers
A. Manufacturers: Subject to compliance with requirements, provide products by the following:
1. Gypsum Board and Related Products:
a. G-P Gypsum Corp.

Part 2 – Products

2.1 Interior Gypsum Wallboard
A. Panel Size: Provide in maximum lengths and widths available that will minimize joints in each area and correspond with support system indicated.

B. Glass Mat, Moisture-Resistant Interior Wall Panel: Coated glass mat-faced, moisture- resistant, treated core gypsum wallboard. Physical properties conforming to the applicable sections of ASTM C 1177 and ASTM C 630.
1. Available Product: Subject to compliance with requirements, products that may be incorporated into the work include, but are not limited to, DensArmor Plus Interior Panels manufactured by G-P Gypsum Corp.
2. Product: Subject to compliance with requirements, provide DensArmor Plus Interior Panels manufactured by G-P Gyp Corp.
3. Core: As indicated on plans.
4. Long Edges: Tapered

Part 3 – Execution

3.0 Installation
A. Glass Mat Gypsum Interior Wall Panel: Install according to manufacturer's written instructions, GA-216.

3.1 Finishing Gypsum Board Assemblies
A. Glass Mat Gypsum Interior Wall Panel: Finish according to manufacturer's written instructions GA-214, for use in interior applications.

Technical Service Hotline 1.800.225.6119 or www.densarmorplus.com

NOTE:
ALL PARTITIONS ARE TO RECEIVE SOUND ATTENUATION BATTS WHETHER SHOWN OR NOT

1. EXTEND ALL PARTITIONS TO UNDERSIDE OF CONSTRUCTION ABOVE UON.
2. STAGGER ALL DRYWALL JOINTS.
3. S.T.C. RATED PARTITIONS TO HAVE SOUND ATTENUATION BLANKETS, SEAL PERIMETER OF PARTITION WITH ACOUSTICAL SEALANT.
4. SEAL AROUND ALL DUCTS, PIPES, ETC. PENETRATIONS THROUGH SOUND RATED PARTITIONS WITH CONTINUOUS ACOUSTICAL SEALANT AND SOUND ATTENUATION BLANKETS
5. GYPSUM BOARD IN WET AREAS SHALL BE DENSSHIELD TILE BACKER.
6. GYPSUM BOARD AT ALL FIRE RATED PARTITIONS SHALL BE FIRE CORE GYPSUM COMPLYING WITH THE SPECIFIED RATED ASSEMBLY.
7. PROVIDE SHEET METAL PLATE REINFORCING IN WALLS FOR SUPPORT OF ALL WALL HUNG RAILING BRACKETS, FIXTURES, DOOR STOPS, AND OTHER ACCESSORIES.
8. LIMITING HEIGHTS OF STEEL STUD ASSEMBLIES:
25 GAUGE
3 5/8" STUD AT 24" OC; MAX 13'-6"
20 GAUGE
3 5/8" STUD AT 24" OC; MAX 20'-0"
18 GAUGE
3 5/8" STUD AT 16"OC; MAX 23'-6"
9. PROVIDE DIAGONAL BRACING ALL COMMON, FIRE AND SMOKE WALLS
10. ALL SMOKE AND FIRE PARTITIONS ARE TO BE PROPERLY FIRE SAFED PER FIRE MARSHALS DIRECTIONS
11. SEE DRAWING G.1 UNDER"BUILDING DEPARTMENT NOTES" FOR FURTHER INFORMATION OF FIRE AND SMOKE PROTECTION.

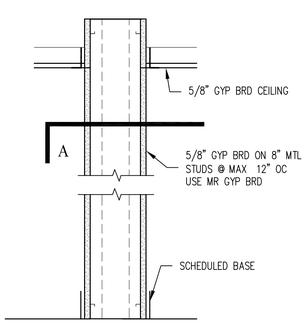

4

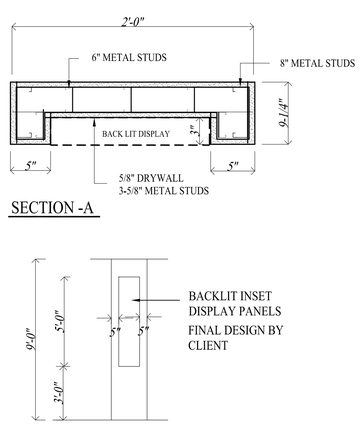

ELEVATION OF RECESSED DISPLAY PANELS

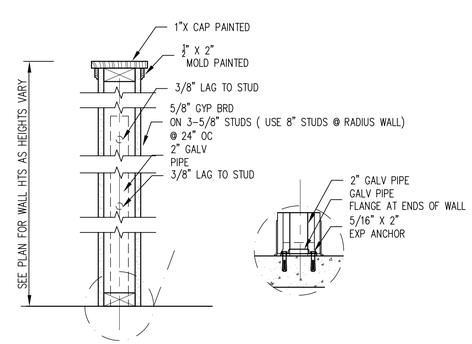

5

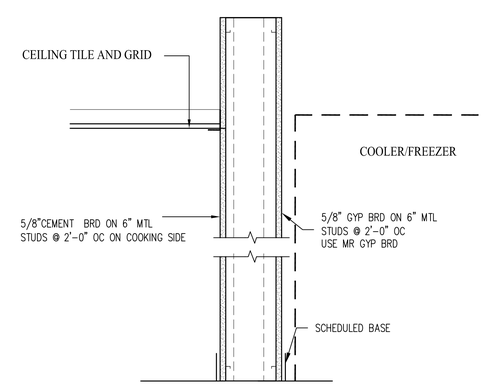

6

ARCHITECTS SEAL

DNA ARCHITECTS , LLC.
415 S BABCOCK ST MELBOURNE FL 32901
3217279096 FAX 3217270810
dnadav@aol.com
AR0015738 WWW.DNA-ARCHITECTS.COM

THESE PLANS ARE AN INSTRUMENT OF SERVICE AND ARE THE PROPERTY OF THE ARCHITECT.INFRINGEMENTS WILL BE PROSECUTED.

DNA

PROJECT: NEW BUILDING FOR: TIFFANY NAILS & SPA AIA INDIALANTIC FL

DRAWING PARTITION SCHEDULE

DATE: 2.15.21 DRAWN BY: DN
SCALE: CHECKED BY:

A.10

REV	DATE	DESCRIPTION	BY

GA FILE NO. WP 1522

2 HOUR FIRE | 55 to 59 STC SOUND

GYPSUM WALLBOARD, METAL STUDS

Base layer 5/8" type X gypsum wallboard or veneer base applied parallel or at right angles to each side of 6" metal studs 24" o.c. with 1" Type S drywall screws 24" o.c.
Face layer 5/8" type X gypsum wallboard or veneer base applied parallel or at right angles to each side with 1 5/8" Type S drywall screws 12" o.c.

Joints staggered 24" each layer and side. Sound tested with 3 1/2" glass fiber friction fit in stud space. (NLB)

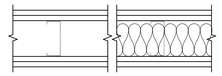

Thickness: 6 1/8"
Limiting Height: Refer to Note
Approx. Weight: 12 psf

Fire Test: WHI-495-0236, 1-30-80
Sound Test: WHI-218-1, 6-11-80

NOTE: 25 GA STUDS UP TO 13'-8": 20 GA STUDS OVER 13'-8" TO 18'-6". GREATER HEIGHTS REQUIRE A 16" STUD SPACING.

7 2 HOUR RATEDE WALL

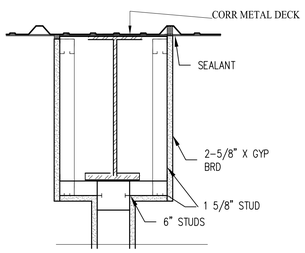

FIREWALL WRAP AT BEAM

System No. W-L-1360
F Rating - 1 Hr & 2 Hr (See Item 1)
T Rating - 0 Hr

WL 1360

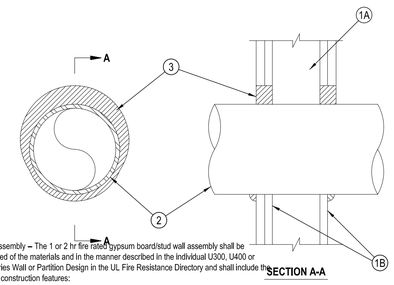

SECTION A-A

1. Wall Assembly -- The 1 or 2 hr fire rated gypsum board/stud wall assembly shall be constructed of the materials and in the manner described in the Individual U300, U400 or V400 Series Wall or Partition Design in the UL Fire Resistance Directory and shall include the following construction features:

A. Studs -- Wall framing may consist of either wood studs or steel channel studs. Wood studs to consist of nom 2 by 4 in. lumber spaced 16 in. OC. Steel studs to be min 2-1/2 in. wide and spaced max 24 in. OC.
B. Gypsum Board* -- The gypsum board type, thickness, number of layers, fastener type and sheet orientation shall be as specified in the individual U300, U400 or V400 Series Design in the UL Fire Resistance Directory. Max diam of opening is 26-5/8 in.

The hourly F Rating of the firestop system is equal to the hourly fire rating of the wall assembly in which it is installed.

2. Through-Penetrant -- One metallic pipe, conduit or tubing installed either concentrically or eccentrically within the firestop system. The annular space between pipe, conduit or tubing and periphery of opening shall be as specified in the Table below. (point contact) to max 1-1/2 in. Pipe, conduit or tubing to be rigidly supported on both sides of wall assembly. The following types and sizes of metallic pipes, conduits or tubing may be used:

A. Steel Pipe -- Nom 24 in. diam (or smaller) Schedule 10 (or heavier) steel pipe.
B. Iron Pipe -- Nom 24 in. diam (or smaller) service weight (or heavier) cast iron soil pipe.
C. Conduit -- Nom 6 in. diam (or smaller) steel conduit or nom 4 in diam (or smaller) steel electrical metallic tubing.
D. Copper Tubing -- Nom 6 in. diam (or smaller) Type L (or heavier) copper tubing.
E. Copper Pipe -- Nom 6 in. diam (or smaller) Regular (or heavier) copper pipe.

HILTI® FIRESTOP SYSTEMS

Reproduced by HILTI, Inc. Courtesy of Underwriters Laboratories, Inc. September 14, 2004

C UL US

Page: 1 of 2

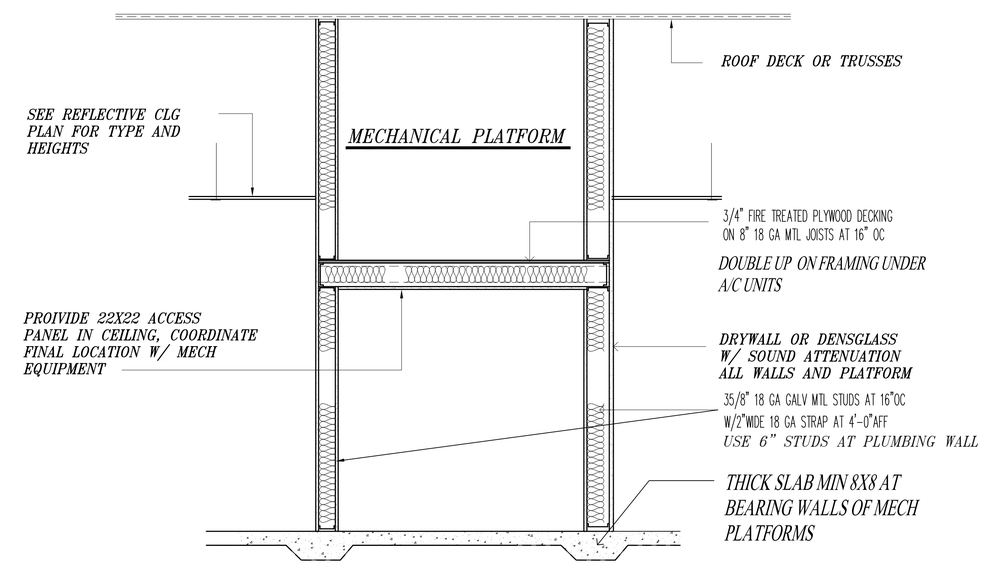

FRAMING OF MECHANICAL DECK ABOVE BATHROOM

System No. W-L-2406
F Ratings — 1 and 2 Hr (See Item 1)
T Ratings — 0, 1/2 and 3/4 Hr (See Item 2)
L Rating At Ambient - 1.2 CFM/sq ft (See Item 3B)
L Rating At 400 F - Less Than 1 CFM/sq ft (See Item 3B)

WL 2406

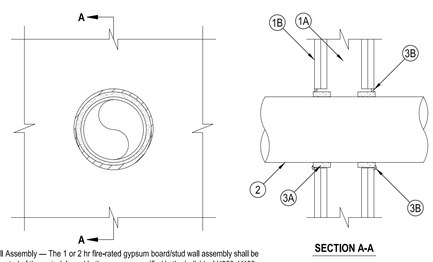

SECTION A-A

1. Wall Assembly — The 1 or 2 hr fire-rated gypsum board/stud wall assembly shall be constructed of the materials and in the manner specified in the individual U300, U400 or V400 Series Wall and Partition Designs in the UL Fire Resistance Directory and shall include the following construction features:
A. Studs — Wall framing may consist of either wood studs or steel channel studs. Wood studs to consist of nom 2 by 4 in. (51 by 102 mm) lumber spaced 16 in. (406 mm) OC. Steel studs to be min 3-1/2 in. (89 mm) wide and spaced max 24 in. (610 mm) OC.
B. Gypsum Board* — One or two layers of nom 5/8 in. (16 mm) thick gypsum board, as specified in the individual Wall and Partition Design. See Table under Item 3B for max diam of opening.
2. Through-Penetrants — One nonmetallic pipe installed within the firestop system. See Table under Item 3B for annular space required in the firestop system. Pipe to be rigidly supported on both sides of wall assembly. The following types and sizes of nonmetallic pipes may be used:
A. Polyvinyl Chloride (PVC) Pipe — Nom 6 in. (152 mm) diam (or smaller) Schedule 40 cellular or solid core PVC pipe for use in closed (process or supply) or vented (drain, waste or vent) piping system.
B. Chlorinated Polyvinyl Chloride (CPVC) Pipe — Nom 6 in. (152 mm) diam (or smaller) SDR 13.5 CPVC pipe for use in closed (process or supply) piping system.
C. Acrylonitrile Butadiene Styrene (ABS) Pipe — Nom 4 in. (102 mm) diam (or smaller) Schedule 40 cellular or solid core ABS pipe for use in closed (process or supply) or vented (drain, waste or vent) piping system.

Hilti Firestop Systems

Reproduced by HILTI, Inc. Courtesy of Underwriters Laboratories, Inc. November 29, 2005

Page: 1 of 2

System No. W-L-3065
F Rating - 1 Hr and 2 Hr (See Item 1)
T Rating - 0 Hr

WL 3065

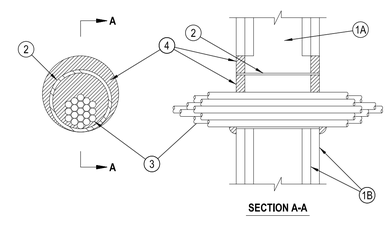

SECTION A-A

1. Wall Assembly — The 1 or 2 fire-rated gypsum wallboard/stud wall assembly shall be constructed of the materials and in the manner specified in the individual U300, U400 or V400 Series Wall and Partition Designs in the UL Fire Resistance Directory and shall include the following construction features:
A. Studs — Wall framing may consist of either wood studs or steel channel studs. Wood studs to consist of nom 2 by 4 in. (51 by 102 mm) lumber spaced 16 in. (406 mm) OC. Steel studs to be min 2-1/2 in. (64 mm) wide and spaced max 24 in. (610 mm) OC.
B. Gypsum Board* — Nom 5/8 in. (16 mm) thick gypsum board, with square or tapered edges. The gypsum board type, thickness, number of layers, fastener type and sheet orientation shall be as specified in the individual U300, U400 or V400 Series Design in the UL Fire Resistance Directory. Max diam of opening is 5-1/2 in. (138 mm) when sleeve (Item 2) is employed. Max diam of opening is 4 in. (102 mm) when sleeve (Item 2) is not employed. The F Rating of the firestop system is equal to the fire rating of the wall assembly.
2. Metallic Sleeve — (Optional) - Nom 4 in. (102 mm) diam (or smaller) steel electrical metallic tubing (EMT) or Schedule 5 (or heavier) steel pipe or min 0.016 in. thick (0.41 mm, No. 28 ga) galv steel sleeve installed flush with wall surfaces. The annular space between steel sleeve and periphery of opening shall be min 0 in. (0 mm, point contact) to max 1 in. (25mm). When Schedule 5 steel pipe or EMT is used, sleeve may extend up to 18 in. (457 mm) beyond the wall surfaces.

Hilti Firestop Systems

Reproduced by HILTI, Inc. Courtesy of Underwriters Laboratories, Inc. November 03, 2006

C UL US

Page: 1 of 2

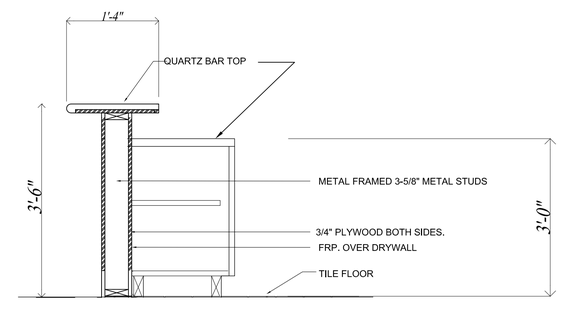

BAR DETAILS

NTS

ARCHITECTS SEAL

DNA ARCHITECTS , LLC.
415 S BABCOCK ST MELBOURNE FL 32901
3217279096 FAX 3217270810
dnadav@aol.com
AR0015738 WWW.DNA-ARCHITECTS.COM

THESE PLANS ARE AN INSTRUMENT OF SERVICE AND ARE THE PROPERTY OF THE ARCHITECT.INFRINGEMENTS WILL BE PROSECUTED.

DNA

PROJECT: NEW BUILDING FOR: TIFFANY NAILS & SPA AIA INDIALANTIC FL

DRAWING

PARTITION SCHEDULE/DETLS

DATE: 2.15.21 DRAWN BY: DN
SCALE: CHECKED BY:

A.10.1

REV	DATE	DESCRIPTION	BY

DOOR #	SIZE	THKNS	TYPE	MAT'L	FRAME	RATED	REMARKS	HDWR TYPE	JAMB TYPE	DOOR NO.
1	2- 3'-0" X 7'-0"	1-3/4"	A	ALUM/GLASS	ALUM	-		1	2	1
2	2- 3'-0" X 7'-0"	1-3/4"	A	ALUM/GLASS	ALUM	-		1	2	2
3	3'-0" X 7'-0"	1-3/4"	B	ALUM/GLASS	ALUM	-		1	2	3
4	3'-0" X 7'-0"	1-3/4"	C	GALV HM	GALV HM	-		6	3	4
5	3'-0" X 8'-0"	1-3/4"	B	SCWD /GLASS	HM	-		5	1	5
6	3'-0" X 8'-0"	1-3/4"	C	SCWD	HM	-		4	1	6
7	3'-0" X 8'-0"	1-3/4"	C	SCWD	HM	-		4	1	7
8	3'-0" X 8'-0"	1-3/4"	C	SCWD	HM	-		4	1	8
9	3'-0" X 8'-0"	1-3/4"	C	SCWD	HM	-	DOOR TO OPEN 180 DEGREES	2	1	9
10	3'-0" X 8'-0"	1-3/4"	C	SCWD	PREFAB	-	POCKET DOOR	8	4	10
11	3'-0" X 8'-0"	1-3/4"	C	SCWD	PREFAB	-	POCKET DOOR	8	4	11
12	3'-0" X 8'-0"	1-3/4"	B	SCWD/GLASS	HM	-		5	1	12
RESTAURANT INTERIOR DOORS										
13	3'-0" X 7'-0"	1-3/4"	D	FIVBERGLASS	PIVOT	-		-	-	13
14	3'-0" X 7'-0"	1-3/4"	C	SCWD	HM	-	KICKPLATES BOTHSIDES	2	1	14

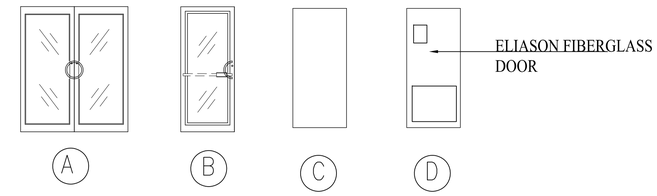

DOOR TYPES

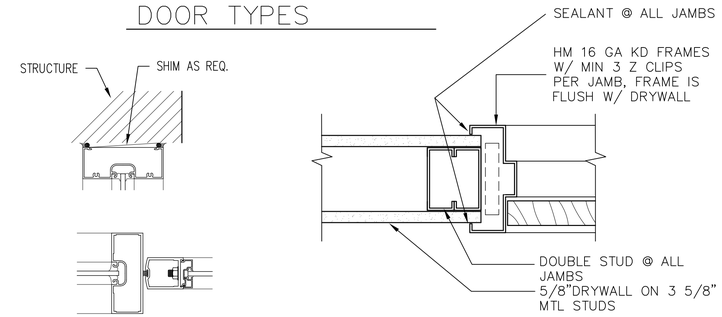

JAMB TYPE 1

GENERAL NOTES:

1. ALL DOORS TO BE LEVER TYPE AS PER ACCESSIBILITY CODE AND APPROVED BY CLIENT
2. ALL DOORS TO BE KEYED ALIKE AS PER OWNERS REQUIREMENTS.
3. ALL DOORS THAT HAVE CLOSERS ARE TO BE PER FLORIDA ACCESSIBILITY CODE.
4. ACCESS TO EXITS SHALL BE MARKED BY APPROVED READILY VISIBLE SIGNS.
5. EMERGENCY LIGHTING FIXTURES SHALL BE INSTALLED AND ARRANGED SO THAT THE PATH OF TRAVEL IS ILLUMINATED, BUT LIGHTING DOES NOT SHINE INTO THE FACE OF PERSONS APPROACHING THE EXIT.
6. LOCKING DEVICES ON EXIT DOORS SHALL BE DIRECT ACTING REQUIRING NO MORE THAN ONE MOTION.
7. PROVIDE WALL DOOR STOPS WHERE REQUIRED.
8. ALL EXTERIOR DOORS TO HAVE WEATHERSTRIPPING.
9. ALL EXTERIOR DOORS TO HAVE ALUM SADDLES: BY ZERO OR EQUAL
10. ALL EMERGENCY DOORS TO BE SINGLE ACTING.
11. ALL WOOD DOORS TO BE SOLID CORE PARTICLE CORE ROTARY CUT, STAIN GRADE.
12. A LATCH OR OTHER FASTENING DEVICE SHALL BE PROVIDED W/ ONLY ONE KNOB, HANDLE, PANIC BAR OR OTHER SIMPLE TYPE OF RELEASING DEVICE. DOORS SHALL BE OPERABLE W/NO MORE THAN ONE RELEASING DEVICE.
13. **HOLLOW METAL DOORS TO BE GALVANIZED A-60 STEEL POLY (707) CONSTRUCTION FULLY INSULATED. DOOR FRAME TO BE GALVANIZED A-60 PRIMED AND PAINTED. INSIDE OF DOOR FRAMES AND UNDERSIDE OF BOTTOM RAIL OF HOLLOW METAL DOORS TO BE SPRAYED W/ AUTOMATIC SPRAY UNDERCOATING.**
14. **ALL HOLLOW METAL FRAMES TO BE 16 GAUGE. ALL HOLLOW METAL DOORS TO BE 18 GAUGE.**

HARDWARE SCHEDULE

SET 1. SINGLE CYLINDER DEADBOLT WITH THUMBTURN, AUTO CLOSER, PUSH/PULL HANDLES

SET 2. PRIVACY LOCKSET, LEVER HANDLE,

SET 3. **LEVER TYPE LOCKABLE CLOSET FUNCTION**

SET 4. OFFICE LOCKSET, LEVER HANDLE

SET 5. PASSAGE LOCKSET, LEVER HANDLE

SET 6 LEVER TYPE ENTRY LOCKSET FUNCTION

SET 7 LEVER TYPE PASSAGE W/ DOOR CLOSURE

SET 8 HANDI CAP POCKET DOOR

ALL HARDWARE FINISHES TO BE 26 D

LEGEND

AL/ALUM –ALUMINUM
SCWD–SOLID CORE WOOD DOOR
HMTL– HOLLOW METAL
GALV–GALVANIZED

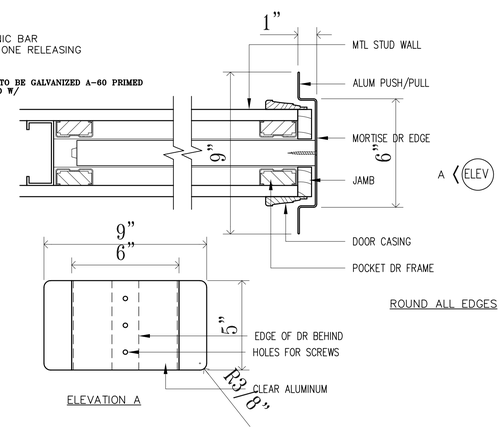

ACCESSIBLE POCKET DOOR PULL

MOUNT HANDLE BELOW DOOR LATCH IF PROVIDED

ALL HARDWARE TO BE MEDIUM GRADE

NO RESIDENCIAL HARDWARE IS EXCEPTABLE

DOOR CLOSERS:

FALCON
LCN
CORBIN/RUSS

LOCKSETS:

SCHLAGE
FALCON
SARGENT

EXIT DEVICES:

FALCON
SARGENT
VON DUPRIN

HINGES, HAGER 5–KNUCKLE:

EXTERIOR DOOR TO BE BALL BEARING, NON–FERROUS BASE METAL NON REMOVABLE PINS.
HEAVY WEIGHT HINGES ON HIGH USE DOORS

HAGER
IVES

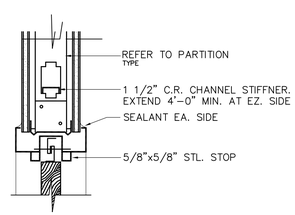

DOOR SECTION AT HEAD

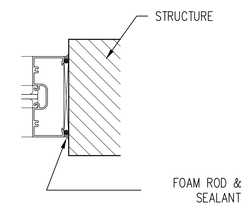

JAMB TYPE 2

ALUMINIUM STOREFRONT

SEE WINDOW SCHEDULE FOR FURTHER DETAILS

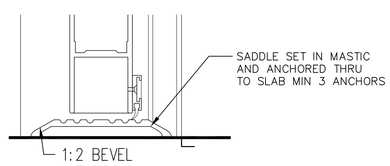

THRESHOLD

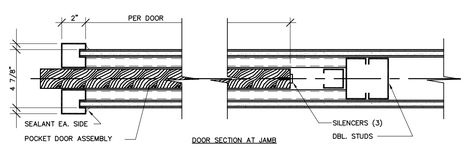

POCKET DOOR

JAMB 4

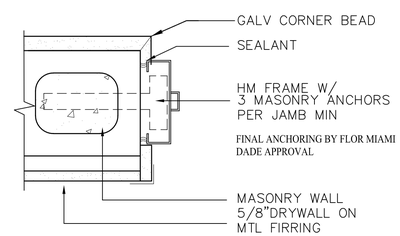

JAMB 3

ARCHITECTS SEAL

DNA ARCHITECTS , LLC.
415 S BABCOCK ST MELBOURNE FL 32901
3217279096 FAX 3217270810
dnadav@aol.com
AR0015738 WWW.DNA–ARCHITECTS.COM

THESE PLANS ARE AN INSTRUMENT OF SERVICE AND ARE THE PROPERTY OF THE ARCHITECT.INFRINGEMENTS WILL BE PROSECUTED.

DNA

PROJECT: NEW BUILDING FOR:
TIFFANY NAILS & SPA
AIA INDIALANTIC FL

DRAWING

DOOR SCHEDULE

DATE: 2.15.21 DRAWN BY: DN
SCALE: 1/4"=1'-0" CHECKED BY:

A.11

REV	DATE	DESCRIPTION	BY

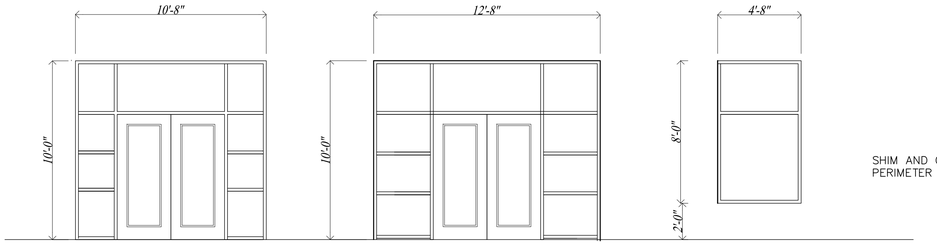

1 2 3

EXTERIOR WINDOW ELEVATIONS

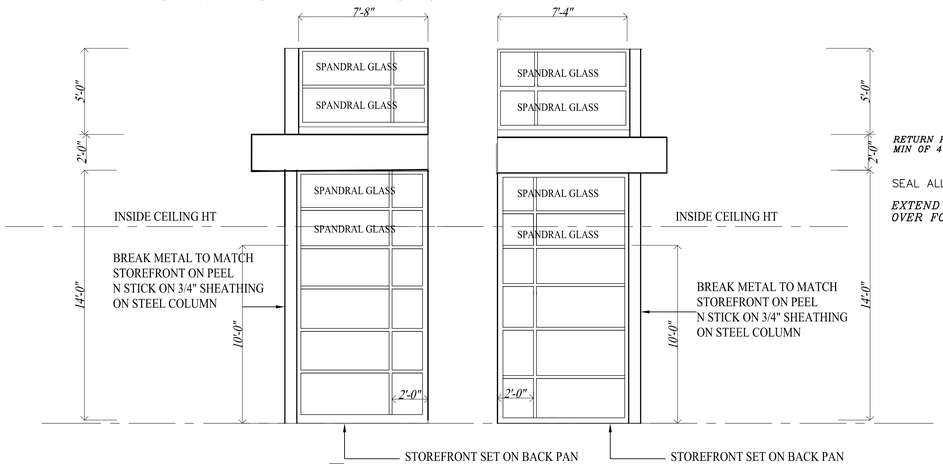

4 4.1

EXTERIOR WINDOW ELEVATIONS

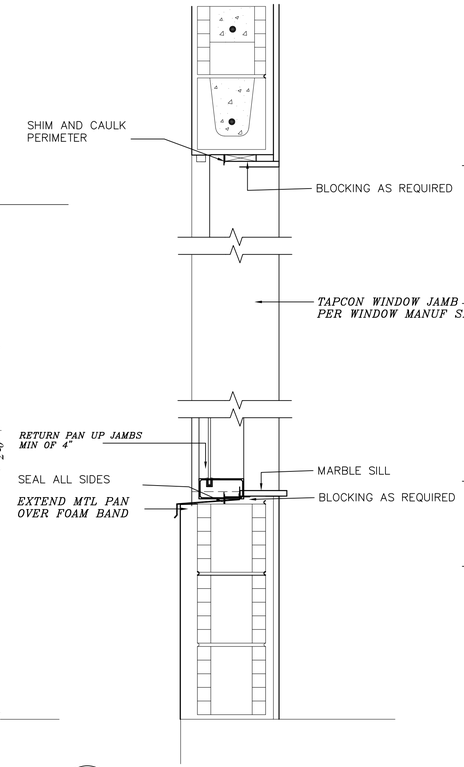

A

WINDOW DETAIL W/O SILL

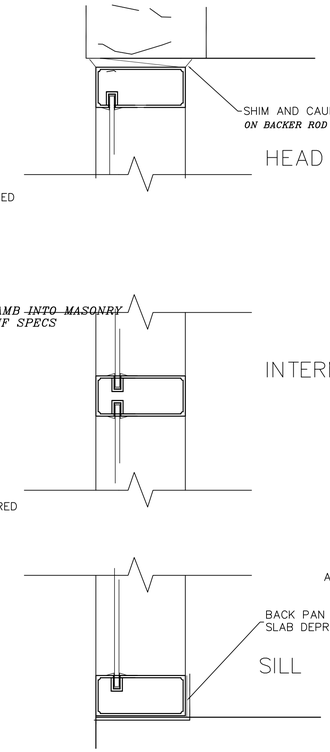

B SECTION 3" = 1'

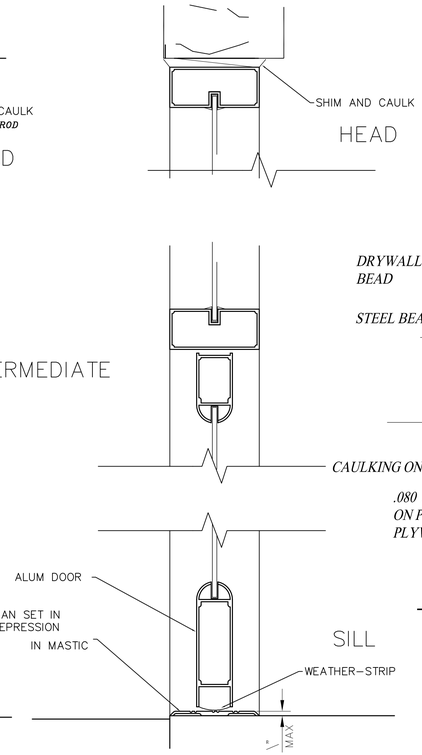

C SECTION 3" = 1'

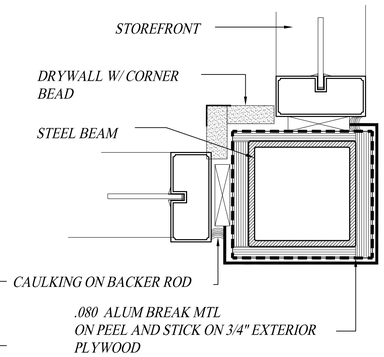

PLAN DETAIL - CORNER COLUMN W/ BREAK MTL

ARCHITECTS SEAL

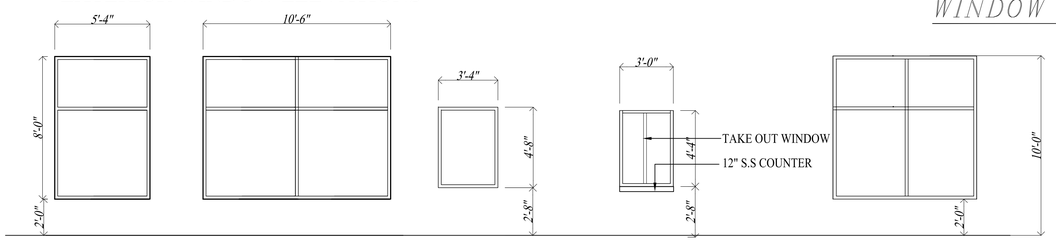

5 6 7 8 9

EXTERIOR WINDOW ELEVATIONS

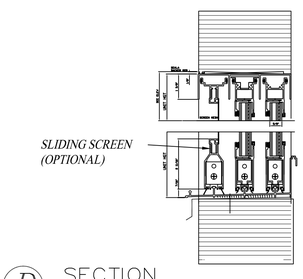

D SECTION

PICK UP WINDOW

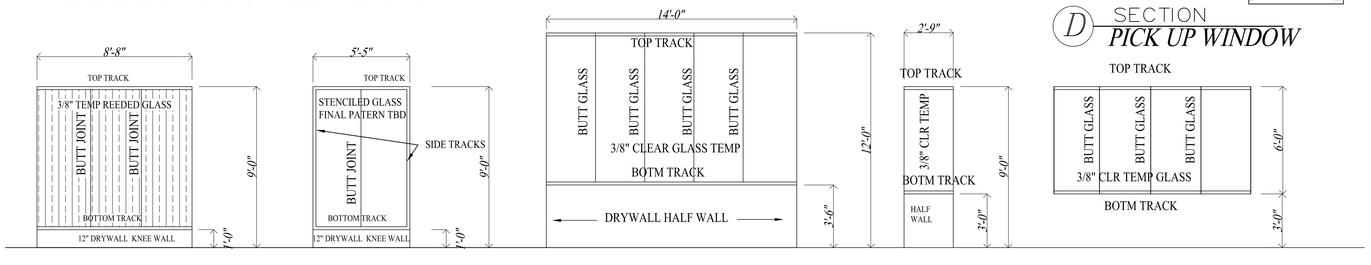

10 11 12 13 14

INTERIOR WINDOW ELEVATIONS

NOTES:

1 ALL WINDOWS ARE TO BE IN ACCORDANCE WITH ANSI/AAMA/NWWDA 101/IS2 OR 101/IS2/NAFS OR AAMA/WDMA/CSA 101/IS2/A440 OR TAS 202 (HVHZ SHALL COMPLY W/TAS 202 UTILIZING ASTM E 1300-98 OR ASTM E 1300-02 OR FBC SECTION 2404). ALL WINDOWS/DOORS SHALL BEAR A PERMANENT LABEL THAT IDENTIFIES THE MANUFACTURE, PERFORMANCE CHARACTERISTICS AND APPROVAL PRODUCT TESTING ENTITY PER FBC 1714.5.2.1.

2 CONTRACTOR IS TO FIELD VERIFY ALL OPNGS PRIOR TO FABRICATION. COORDINATE ALL WORK WITH GENERAL CONTRACTOR.

3 THE FOLLOWING MANUFACTURES ARE APPROVED FOR COMMERCIAL USE: KAWNEER OR YKK WALL

4 ALL WINDOWS AND DOORS TO MEET FBC 2020 AND BUILDING ENGINEER'S DATA FOR WIND RESISTANCE.

5 SHADING COEFFICIENT =MIN .7 FOR TINTED AND .5 FOR REFLECTIVE

6 IMPACT GLAZING TO BE IR501 W/ 1-5/16" GLASS INSULATED LAMINATE , LOW-E

7 ALL GLAZING ADJACENT TO DOORS AND OR FLOOR ARE TO BE TEMPERED.

8 ALL GLASS TO BE TINTED AS SHOWN. SUBMIT COLOR SAMPLE FOR CLIENT APPROVAL

9 FINISH OF ALUMINUM FRAMES TO BE CLEAR ANODIZED

10. CONTRACTOR IS TO COORDINATE ALL MASONRY OPENINGS W/ WINDOW CONTRACTOR

DNA ARCHITECTS , LLC.
415 S BABCOCK ST MELBOURNE FL 32901
3217279096 FAX 3217270810
dnadav@aol.com
AR0015738 WWW.DNA-ARCHITECTS.COM

THESE PLANS ARE AN INSTRUMENT OF SERVICE AND ARE THE PROPERTY OF THE ARCHITECT.INFRINGEMENTS WILL BE PROSECUTED.

DNA

PROJECT: NEW BUILDING FOR: TIFFANY NAILS & SPA AIA INDIALANTIC FL

DRAWING

WINDOW SCHEDULE

DATE: 2.15.21 DRAWN BY: DN

SCALE: 1/4"=1'-0" CHECKED BY:

A.12

REV	DATE	DESCRIPTION	BY

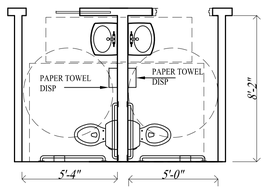

MENS RM WOMENS RM

IN LIEU OF PAPER TOWEL DISP CONTRACTOR IS TO PRICE ADD ALTERNATE FOR DYSON HAND DRYERS # AB14-GRAY

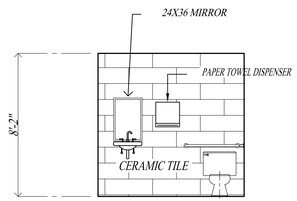

ELEVATION 1

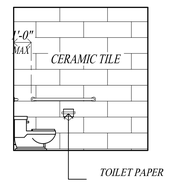

ELEVATION 2

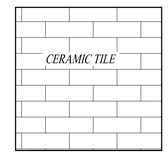

ELEVATION 3

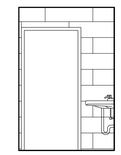

ELEVATION 4

MENS BATHROOM

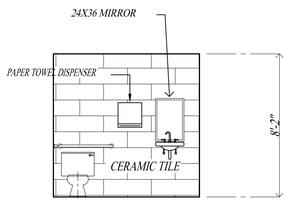

ELEVATION 1

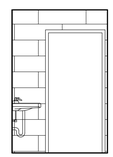

ELEVATION 2

ELEVATION 3

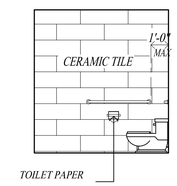

ELEVATION 4

WOMENS BATHROOM

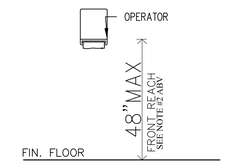

TOWEL DISP.

ACCESSORY MOUNTING HEIGHTS

SIGNAGE REQUIREMENTS:

SIGNAGE SHALL COMPLY WITH ADA AND FLORIDA HANDICAP REQUIREMENTS.

1. SIGNS SHALL INCLUDE THE FOLLOWING REQUIREMENTS;
   - A. RAISED AND BRAILE CHARACTERS & PICTOGRAMS.
   - B. THE CHARACTERS AND BACKGROUND OF SIGNS SHALL BE EGGSHELL, MATTE OR OTHER NON-GLARE FINISH.
   - C. CHARACTERS & SYMBOLS SHALL CONTRAST WITH THEIR BACKGROUND.
   - D. LETTERS AND NUMBERS ON SIGNS SHALL HAVE A WIDTH TO HEIGHT RATIO BETWEEN 1:1 & 3:5, AND STROKE WIDTH TO HEIGHT RATIO BETWEEN 1:5 & 1:10.
   - E. SIGNS SHALL BE INSTALLED ON THE WALL ADJACENT TO THE LATCH SIDE OF THE DOOR, AND POSITIONED SUCH THAT A PERSON MAY STAND WITHIN 3" OF THE DOOR AND NOT BE WITHIN THE SWING OF THE DOOR.
   - F. SEE MOUNTING HT BELOW FOR ALL SIGNAGE.
2. PROVIDE SIGNS AT THE FOLLOWING LOCATIONS:
   - A. ALL BATHROOMS

TOILET ACCESSORIES:

MATERIALS:

ALL TOILET ACCESSORIES SHALL BE MANUFACTURED BY BOBRICK OR AN APPROVED EQUAL. THE FOLLOWING LIST FURNISHES THE MODEL NUMBER AND QUANTITIES REQUIRED FOR THE PROJECT.

T.P. HOLDER	BOBRICK B-685
PAPER TOWEL DISP	BOBRICK B-262

TOILET NOTES

1. MIRRORS SHALL BE 18" X 24" (TILT TYPE OPTIONAL) THE BOTTOM OF THE REFLECTIVE SURFACE SHALL BE NO HIGHER THAN 40" ABOVE FINISHED FLOOR.
2. THE HIGHEST OPERABLE PART OF DISPENSERS AND RECEPTACLES SHALL BE NO HIGHER THAN 48" ABOVE FINISHED FLOOR.
3. LAVATORIES SHALL BE MOUNTED WITH THE RIM OR COUNTER NO HIGHER THAN 34" ABOVE FINISH FLOOR.
4. THE DIAMETER OF THE GRIPPING SURFACE OF THE GRAB BARS SHALL BE 1 1/4" TO 1 1/2" DIAM. PROVIDE A MINIMUN 1 1/2" CLEARANCE BETWEEN THE BAR AND THE WALL.
5. SEE DETAILS 1-3 BELOW FOR ALL TOILET PAPER MOUNTING HTS.
6. THE HIGHT OF THE TOILET FROM THE FLOOR TO THE TOP OF THE SEAT SHALL BE 17" MINIMUM, 19" MAXIMUM.

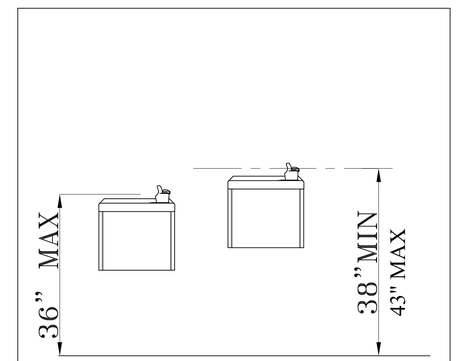

DRINKING FOUNTAIN HTS

ARCHITECTS SEAL

DNA ARCHITECTS , LLC.
415 S BABCOCK ST MELBOURNE FL 32901
3217279096 FAX 3217270810
dnadav@aol.com
AR0015738 WWW.DNA-ARCHITECTS.COM

THESE PLANS ARE AN INSTRUMENT OF SERVICE AND ARE THE PROPERTY OF THE ARCHITECT.INFRINGEMENTS WILL BE PROSECUTED.

DNA

PROJECT: NEW BUILDING FOR: TIFFANY NAILS & SPA AIA INDIALANTIC FL

DRAWING

BATHROOM ELEVATIONS

DATE: 2.15.21 DRAWN BY: DN
SCALE: 1/4"=1'-0" CHECKED BY:

A.13

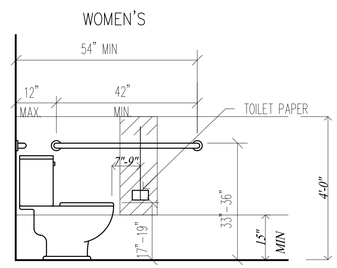

1

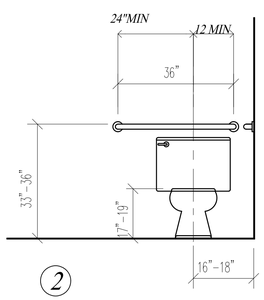

2

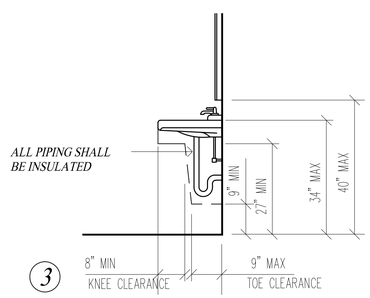

3

REST ROOM ELEVATIONS

WATER SUPPLY AND DRAIN PIPES UNDER LAVATORIES & SINKS SHALL BE INSULATED OR OTHERWISE CONFIGURED TO PROJECT AGAINST CONTACT. THERE SHALL BE NO SHARP OR ABRASIVE SURFACES UNDER LAVS AND SINKS

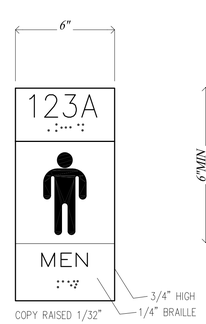

MEN'S TOILET

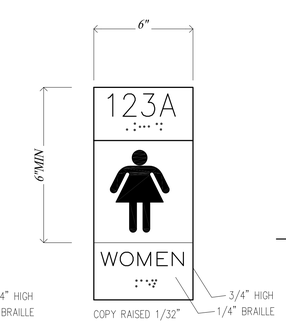

WOMEN'S TOILET

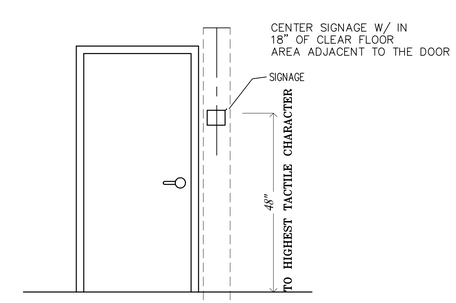

A SINGLE DOORS

SIGN TYPES

TYPICAL ALL ROOMS

RAISED CHARACTER HT SHALL COMPLY TO FBC FOR ACCESSIBILTY SEC 703.2.5

REV	DATE	DESCRIPTION	BY

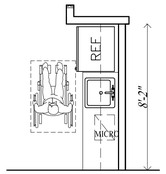

PLAN
PLAS LAM CTR AND CABS
BREAK ROOM

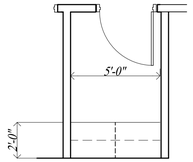

PLAN
PLAS LAM CTR AND CABS
OFFICE

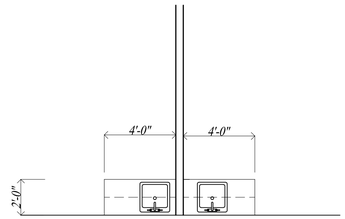

PLAN PLAN
PLAS LAM CTR AND CABS
MASSAGE WAXING

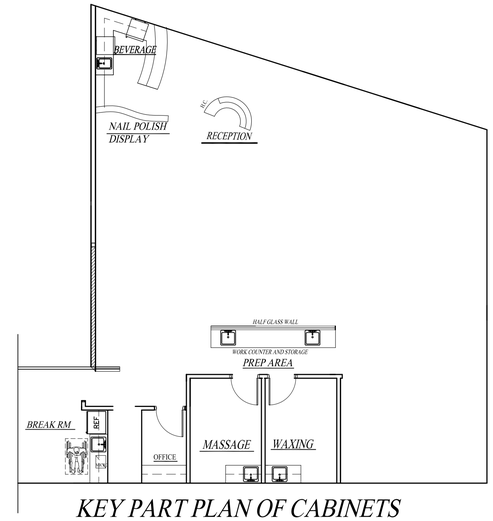

KEY PART PLAN OF CABINETS
NTS

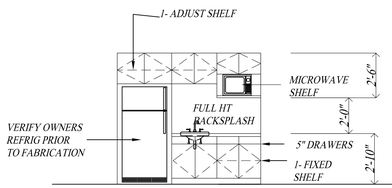

ELEVATION
BREAK ROOM

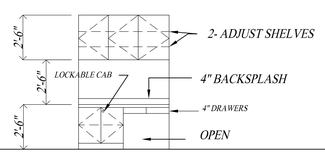

ELEVATION
OFFICE

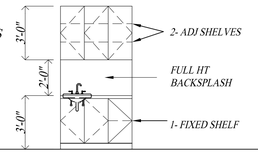

ELEVATION
MASSAGE

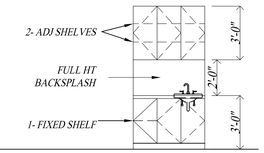

ELEVATION
WAXING

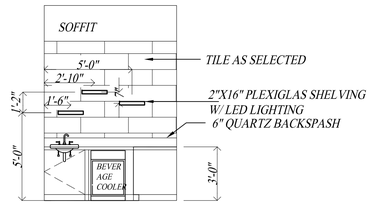

ELEVATION 1

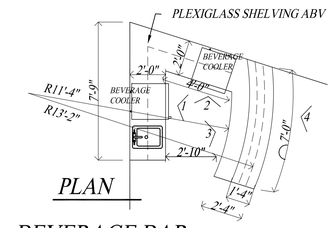

PLAN
BEVERAGE BAR

ARCHITECTS SEAL

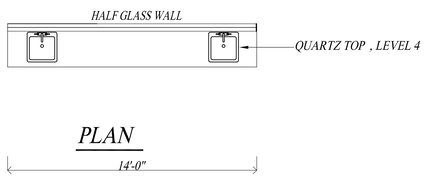

PLAN

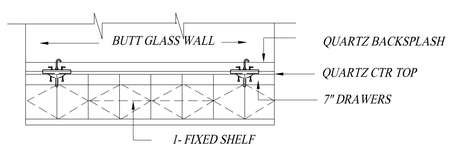

ELEVATION
PREP AREA

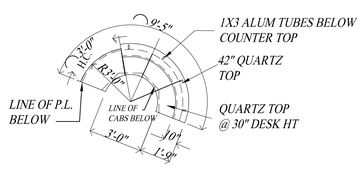

PLAN

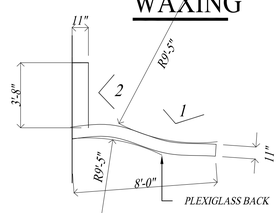

NAIL POLISH DISPLAY

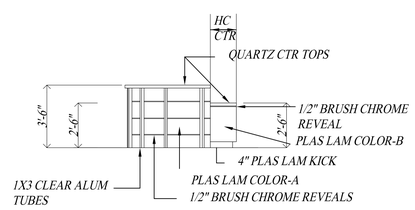

ELEVATION 1

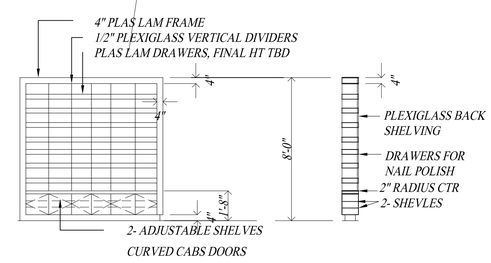

ELEVATION 1

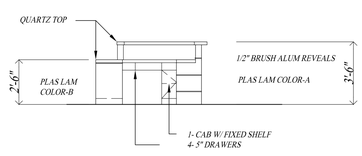

ELEVATION 2

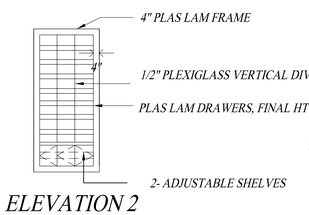

ELEVATION 2

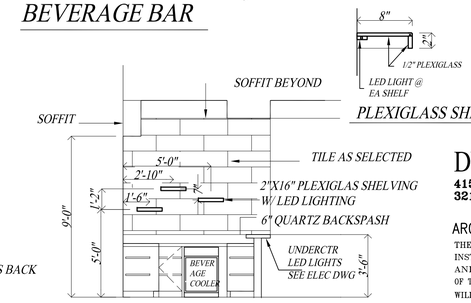

PLEXIGLASS SHELF

ELEVATION 2

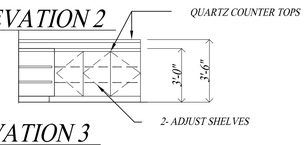

ELEVATION 3

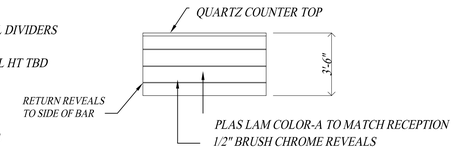

ELEVATION 4

RECEPTION DESK

NOTE : CONTRACTOR IS TO REVIEW ALL CABINETRY ELEVATIONS WITH CLIENT PRIOR TO FABRICATION

DNA ARCHITECTS , LLC.
415 S BABCOCK ST MELBOURNE FL 32901
3217279096 FAX 3217270810
dnadav@aol.com
AR0015738 WWW.DNA-ARCHITECTS.COM

THESE PLANS ARE AN INSTRUMENT OF SERVICE AND ARE THE PROPERTY OF THE ARCHITECT.INFRINGEMENTS WILL BE PROSECUTED.

DNA

PROJECT: NEW BUILDING FOR:
TIFFANY NAILS & SPA
AIA INDIALANTIC FL

DRAWING
CABINETRY ELEVATIONS

DATE: 2.15.21 DRAWN BY: DN
SCALE: 1/4"=1'-0" CHECKED BY:

A.14

REV	DATE	DESCRIPTION	BY

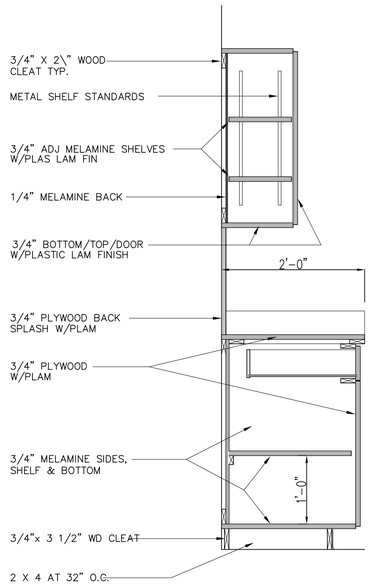

TYPICAL SECTION THRU CABINETRY

ARCHITECTURAL WOODWORK:

GENERAL: SUPPLY AND INSTALL ALL ARCHITECTURAL WOODWORK AS SHOWN ON THE DRAWINGS AND AS SPECIFIED HEREIN.

ALL MILLWORK SHALL MEET THE SPECIFICATIONS AS OUTLINED IN THE AWI, ARCHITECTURAL WOOD STANDARDS, GUIDE SPECIFICATIONS AND QUALITY CERTIFICATE PROGRAM, 5TH EDITIONS FOR CUSTOM GRADE FLUSH OVERLAY STANDARD.

SHOP DRAWINGS: SUBMIT SHOP DRAWINGS OF ALL CABINET WORK BASED ON THE ARCHITECT'S DRAWINGS TO THE CLIENT FOR APPROVAL. NO CABINET WILL BE FABRICATED UNTIL COMPLETE SHOP DRAWINGS HAVE BEEN REVIEWED AND APPROVED, AND NONE SHALL BE DELIVERED ON THE JOB BEFORE WORK IS ADEQUATELY DRIED IN.

MATERIALS:

LUMBER: NUMBER 2 GRADE D45 KILN DRIED PONDEROSA PINE.

PLYWOOD: DOUGLAS FIR, 3/4" THICK, 7 PLY EXT., APX GRADE BY APA, OR BIRCH 3/4" THICK, 7 PLY EXT., A-2 GRADE BY NHPA.

PARTICLE BOARD: DOUGLAS FIR, 3/4" THICK INDUSTRIAL GRADE, 45 LB. DENSITY.

PLASTIC LAMINATE: SHALL BE FORMICA, MICARTA, NEVAMAR OR WILSONART. COLOR SELECTED BY ARCHITECT. MINIMUM THICKNESS AS FOLLOWS:

ALL HORIZONTAL SURFACES	STANDARD GRADE	.050" THICK
ALL VERTICAL SURFACES	VERTICAL GRADE	.030" THICK
ALL CABINET LINERS	CABINET GRADE	.020" THICK

ADHESIVES: USE ONLY ADHESIVES AS RECOMMENDED BY PLASTIC LAMINATE MANUFACTURER.

HARDWARE: CONSULT THE DRAWINGS FOR LOCATIONS AND QUANTITY OF CABINET HARDWARE. THE FOLLOWING IS A LIST OF MAJOR ITEMS:

DRAWER SLIDES: KNAPE & VOGT-1300, SINGLE ACTION, 75 LB BEARING
SHELF STANDARD: KNAPE & VOGT-255, ZINC PLATED STEEL, RECESSED AND/OR SURFACE MOUNTED WITH 256 SHELF STANDARD CLIP.
HINGES: BLUM 95 M5580, CONCEALED SELF CLOSING HINGE WITH MOUNTING PLATE 198.8601.22 WITH 5/8" OVERLAY.
PULLS: STANLEY 4484, 4" WIRE PULL, BRUSHED CHROME 26D FINISH.

INSTALLATION:

ALL ARCHITECTURAL WOODWORK SHALL BE INSTALLED PLUMB AND LEVEL AND SECURELY FASTENED TO SURROUNDING WALLS AND FLOORS.

APPLY WOOD LIFE TREATMENT TO ALL BACKS, SIDES AND TOPS OF CABINETS PLACED AGAINST MASONRY OR PLASTER.

ALL DIMENSIONS FOR ARCHITECTURAL WOODWORK SHALL BE MADE IN THE FIELD. PROVIDE ALL FILLERS, SCRIBES TO COMPLETE ASSEMBLY. MAKE ALL CUTOUTS FOR MECHANICAL AND ELECTRICAL SERVICES AS REQUIRED.

UPON COMPLETION OF WORK, CLEAN ALL SURFACES INCLUDING HARDWARE AND MECHANICAL AND ELECTRICAL WORK AND MILLWORK CLEAN THE SPACES OF ALL DIRT AND DEBRIS.

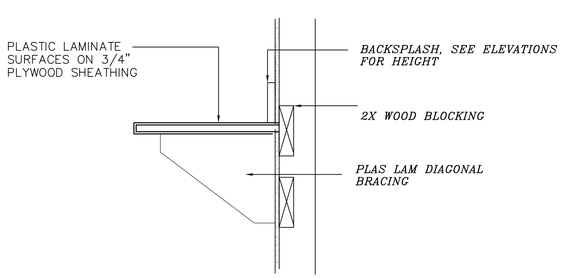

COUNTER TOPS

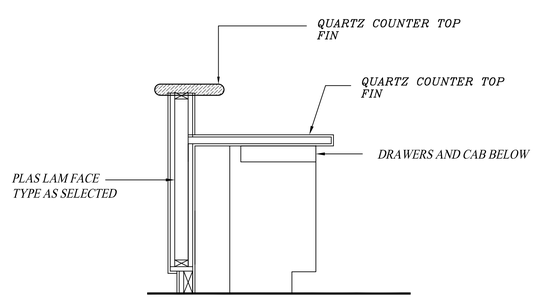

LOBBY COUNTER TOPS

ARCHITECTS SEAL

DNA ARCHITECTS , LLC.
415 S BABCOCK ST MELBOURNE FL 32901
3217279096 FAX 3217270810
dnadav@aol.com
AR0015738 WWW.DNA-ARCHITECTS.COM

THESE PLANS ARE AN INSTRUMENT OF SERVICE AND ARE THE PROPERTY OF THE ARCHITECT.INFRINGEMENTS WILL BE PROSECUTED.

DNA

PROJECT: NEW BUILDING FOR:
TIFFANY NAILS & SPA
AIA INDIALANTIC FL

DRAWING

CABINETRY ELEVATIONS

DATE: 2.15.21 DRAWN BY: DN
SCALE: 1/4"=1'-0" CHECKED BY:

A.14.1

REV	DATE	DESCRIPTION	BY

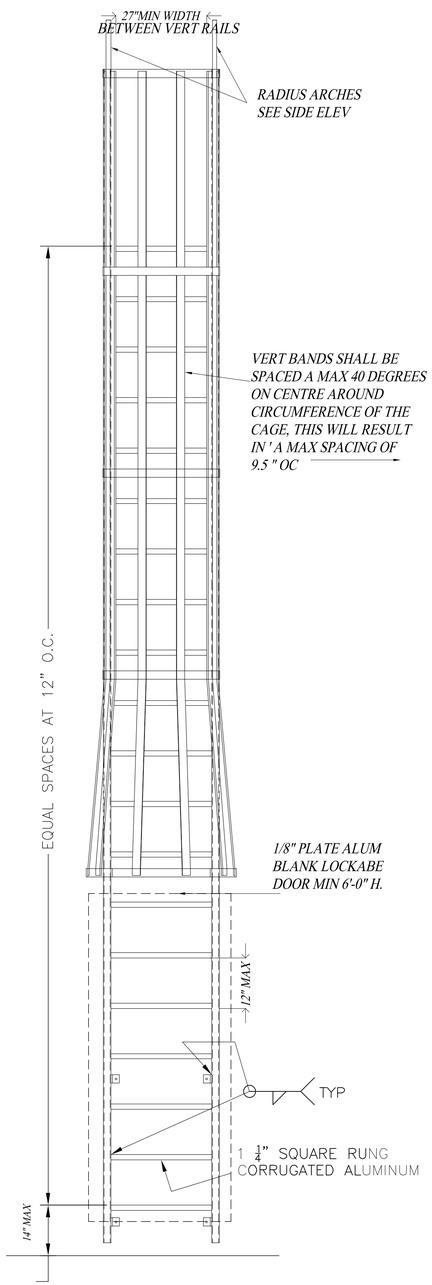

FRONT ELEVATION

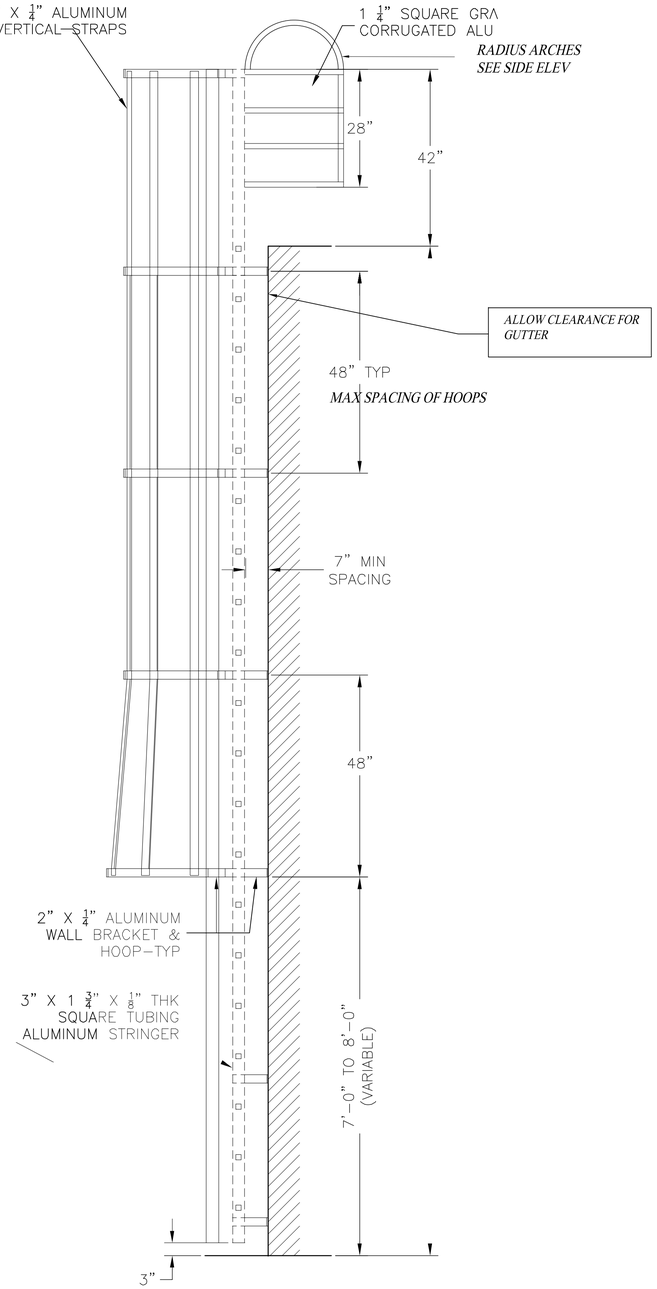

SIDE ELEVATION

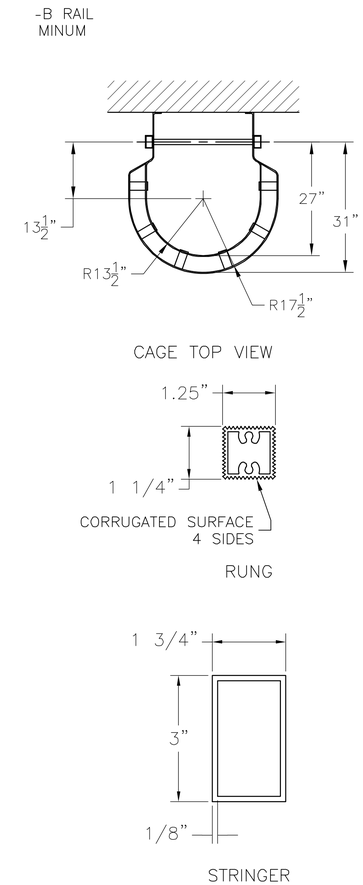

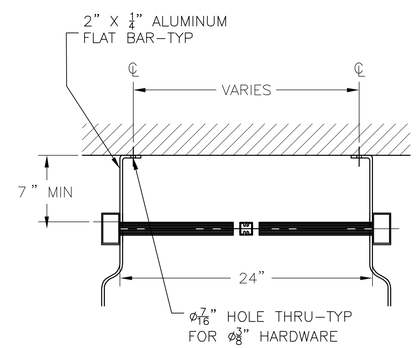

RUNG ASSEMBLY

ARCHITECTS SEAL

DNA ARCHITECTS , LLC.
415 S BABCOCK ST MELBOURNE FL 32901
3217279096 FAX 3217270810
dnadav@aol.com
AR0015738 WWW.DNA-ARCHITECTS.COM

THESE PLANS ARE AN INSTRUMENT OF SERVICE AND ARE THE PROPERTY OF THE ARCHITECT.INFRINGEMENTS WILL BE PROSECUTED.

DNA

PROJECT: NEW BUILDING FOR:
TIFFANY NAILS
AIA INDIALANTIC FL

DRAWING

ROOF LADDER DETAIL

DATE: 2.15.21 DRAWN BY: DN
SCALE: NTS CHECKED BY:

A.15

REV	DATE	DESCRIPTION	BY

FINISH SCHEDULE

ROOM NAME	FLOOR: 24X24 TILE	FLOOR: 8X8 QUARRY TILE	FLOOR:	FLOOR:	FLOOR:	FLOOR:	FLOOR:	FLOOR:	BASE: TILE TO MATCH FLOOR TILE	BASE:	BASE:	BASE:	BASE:	WALLS: PAINT	WALLS: TILE	WALLS: FRP FULL HT	WALLS: STAINLESS STEEL	WALLS:	WALLS:	WALLS:	CEILNG: 2x2 SUSPENDED CEILING	CEILNG: DRYWALL	CEILNG: 2x4 WASHABLE TILE & GRID	CEILNG: NO CEILING REQUIRED	CEILNG:	CEILNG:	CEILNG:	CEILNG:	
NAIL SALON																													
WAITING AREA/ RECEPTION	●								●					●									●						
BEVERAGE BAR	●								●					●									●						*SEE CABINETRY ELEV FOR TILE WALL AT BACK BAR*
MANICURE STATIONS	●								●					●									●						
PEDICURE - EAST	●								●					●									●						
PREP AREA	●								●					●									●						
GROUP PEDICURE	●								●					●							●								
WAXING ROOM	●								●					●							●								
MASSAGE ROOM	●								●					●							●								
OFFICE	●								●					●							●								
WOMENS ROOM	●								●					●	●								●						SEE BATHROOM ELEV FOR EXTENT OF WALL TILE
MENS ROOM	●								●					●	●								●						SEE BATHROOM ELEV FOR EXTENT OF WALL TILE
UTILITY ROOM	●								●					●		●					●								FRP FULL HT TO CEILING ALL WALLS
BREAK ROOM	●								●					●		●					●								
TAKE OUT NOODLES																													
TAKE OUT SEATING	●								●					●	●						●								TILE TO 36" ALL WALLS OF TAKE OUT /DINING AREA
UNI- SEX BATHROOM	●								●					●	●								●						SEE BATHROOM ELEV FOR EXTENT OF TILE
SERVING LINE		●							●					●	●									●					TILE UP TO 48" ON EAST WALL DOWN TO STAINLESS WALL PANELS
COOKING LINE		●							●								●							●					STAINLESS STEEL PANELS EAST AND SOUTH WALLS OF COOKING AREA
WASHING AREA		●							●							●								●					FRP FULL HT ALL WALLS IN WASH AREA ; NORTH,EAST WEST,SOUTH
COOLER/FREEZER WALK IN		●							●					●											●				

CEILING TILE AND GRID :

BY ARMSTRONG CEILING TILE

TAKE OUT RESTAURANT:

DINING AREA:

CIRRUS # 563 2X2X7/8" IN 15/16" GRID
KITCHEN AND PREP: #672 2X4 IN 15/16" GRID WASHABLE

NAIL SALON:

BREAK ROOM,UTILITY CLOS,OFFICEL,HALLWAY
MASSAGE , WAXING, AND GROUG PEDICURE:
704 CORTEGA 2X2X5/8" TEGULAR IN 15/16" GRID

PRICE ADD ALTERNATE FOR FLOORING IN WAITING/ MANICURE/PEDICURE FLOORS: TANDUS CENTIVA "VICTORY" SERIES WITH LASER CUT PATTERN

PAINT SPECIFICATIONS:

EXTERIOR SURFACES

CONCRETE STUCCO: LOXON ACRYLIC MASONRY PRIMER–A24W300–1ST COAT
DURACRAFT EXTERIOR ACRYLIC LATEX SATIN–B37WW1351–2ND AND 3RD COATS

CONCRETE BLOCK: 1 COAT LOXON BLOCK SURFACER –A24W200–1ST COAT
DURACRAFT EXTERIOR ACRYLIC LATEX SATIN–B37WW1351–2ND AND 3RD COATS

FERROUS METAL ALKYD SYSTEM: KEM KROMIK UNIVERSAL METAL PRIMER –B50WZ1–1ST COAT
INDUSTRIAL URETHANE ALKYD ENAMEL –B54W151–2ND AND 3RD COATS

FERROUS METAL–ACRYLIC SYSTEM: PRO–CRYL UNIVERSAL PRIMER–B66W310–1ST COAT
SHER–CRYL HPA HIGH PERFORMANCE ACRYLIC –B66W351–2ND AND 3RD COATS

INTERIOR SURFACES

CEMENT PLASTER: MULTI PURPOSE OIL–BASED PRIMER–B49WW8820–1ST COAT
PRO MAR 400 INTERIOR FLAT B30W451–2ND AND 3RD COATS
OR PRO MAR 400 INTERIOR EGG SHELL–B20W1451–2ND AND 3RD COATS

GYPSUM WALLBOARD: PREP RITE HI BUILD INTERIOR PRIMER–B28W601–1ST COAT
PRO MAR 400 INTERIOR FLAT –B30W451–2ND AND 3RD COATS
OR PRO MAR 400 INTERIOR EGG SHELL –B20W4451–2ND AND 3RD COATS

GREENBOARD WALLS: PREP RITE HI BUILD INTERIOR PRIMER –B28W601–1ST COAT
PRO MAR 400 INTERIOR SEMI GLOSS–B31W4451–2ND AND 3RD COATS

WOOD (PAINTED)ACRYLIC FINISH: MULTI PURPOSE OIL–BASED PRIMER–B49WW8820– 1ST COAT
PRO MAR 200 ACRYLIC SEMI–GLOSS–B31W2251–2ND AND 3RD COATS

WOOD (TRANSPARENT): WOOD CLASSICS OIL BASED STAIN–A48N200–1 COAT
WOOD CLASSICS SANDING SEALER–B26W43–1 COAT
WOOD CLASSICS OIL BASED GLOSS VARNISH–A66F391–2ND AND 3RD COATS

WOOD (PAINTED) ALKYD FINISH : – MULTI PURPOSE –BASAED PRIMER–B49WW8820–1ST COAT
PRO MAR 200 INTERIOR ALKYD SEMI GLOSS –B34W4451–2ND AND 3RD COATS

FERROUS METAL: KEM KROMIK UNIVERSAL METAL PRIMER –B50WZ1–1ST COAT
INDUSTRIAL URETHANE ALKYD ENAMEL –B54W151 –2ND AND 3RD COATS

GALVANIZED METAL: PRO–CRYL UNIVERSAL PRIMER –B66W310–1ST COAT
SHER–CRYL HPA HIGH PREFORMANCE ACRYLIC–B66W351–2ND AND 3RD COATS

CONCRETE BLOCK: PREP RITE/EXTERIOR BLOCK FILLER–B25W25–1ST COAT
PRO MAR 400 INTERIOR SEMI–GLOSS –B31W4451–2ND AND 3RD COATS

ALUMINUM MILLFINISH: 1 COAT PREPRITE BLOCK FILLER B25W25
2 COATS PRO–MAR 400 LATEX SEMI–GLOSS ENAMEL B31W401

EPOXY PAINT : PRO INDUSTRIAL EPOXY B73 FOR ALL WALLS FOR BATHROOM WALLS NOT RECEIVING TILE

PAINTED CONC FLOORS: (ONLY IF INDICATED ON FIN SCHEDULE)ARMORSEAL 8100

ARCHITECTS SEAL

FINISH NOTES

1. INSTALLATION OF ALL FINISH MATERIALS SHALL BE ACCORDING TO THE MANUFACTURERS RECOMMENDED USE AND METHOD OF INSTALLATION FOR EACH PRODUCT TO ACHIEVE THE INTENDED PURPOSE AND RESULT.
2. UPON COMPLETION OF WORK IN EACH AREA, REMOVE FROM THE SITE ALL SURPLUS PRODUCTS, RUBBISH AND DEBRIS RESULTING FROM THE OPERATIONS, INCLUDING EQUIP– MENT AND IMPLEMENTS, DUST, OIL, STAINS, FINGERPRINTS AND LABELS.
3. ALL MATERIALS OF ONE TYPE OR ONE COLOR OR PATTERN SHALL BE OF THE SAME DYE LOT ON THE PROJECT.
4. PRIOR TO INSTALLATION, THE FLOORING CONTRACTOR SHALL INSPECT THE PRODUCTS TO INSURE THAT THEY ARE THE PROPER TYPE AND IN PROPER CONDITION.
5. THE FLOORING CONTRACTOR SHALL FURNISH TO THE CLIENT THE MFG'S WRITTEN MAINTENANCE INSTRUCTIONS FOR EACH TYPE OF MATERIAL INSTALLED.
6. IT IS THE FLOORING CONTRACTORS RESPONSIBILITY TO SEE THAT ALL SURFACES TO RECEIVE FLOOR COVERING SHALL BE SMOOTH, EVEN AND FREE OF DEFECTS. SURFACES NOT MEETING ADEQUATE SUBSTRATE CONDITIONS SHALL BE REPAIRED.

WATER ABSORPTION

LEVEL OF POROSITY

– IMPERVIOUS – .5% OR LESS (PORCELAIN BODIED TILE)

– VITREOUS – >.5% BUT <3.0% (RAM PRESSED PAVER, PRESSED UNGLAZED PAVERS)

– SEMI–VITREOUS – >3.0% BUT <7.0% (QUARRY TILE)

– NON–VITREOUS – >7.0% – (WALL TILE, SALTILLO TILE)

PEI (PORCELAIN ENAMEL INSTITUTE)
ABRASION RESISTANCE TEST

RATINGS ARE ASSIGNED BASED ON WHEN VISUAL ABRASION OCCURS, USING A NUMBERING SYSTEM. 3 OR HIGHER IS RECOMMENDED FOR COMMERCIAL FLOORS.

SLIP RESISTANCE

OSHA – .50 WET AND DRAY

CERAMIC TILE INSTITUTE OF AMERICA – .60 WET AND DRY

AMERICAN WITH DISABILITY ACT (ADA) – A STATIC COEFFICIENT OF FRICTION OF .60 FOR ACCESSIBLE ROUTES AND .80 FOR RAMPS.

CONTRACTOR IS TO FOLLOW THE FOLLOWING GUIDELINES

ANSI A137.1
SPECIFICATIONS FOR MANUFACTURING TILE

ANSI A108/118/136
SPECIFICATIONS FOR INSTALLING TILE

ASTM
TESTING METHODS OF TILE

TILE COUNCIL OF AMERICA HANDBOOK
HANDBOOK FOR CERAMIC TILE
INSTALLATION

CONTROL JOINTS SHALL BE MAX 20'–0" OC INTERIOR AND EXTERIOR 8'–0" – 12'–0" MAX
EXPANSION JOINTS SHALL BE EJ171
CONCRETE MOISTURE TEST SHALL BE TAKEN PRIOR TO TILE INSTALLATION

DNA ARCHITECTS , LLC.
415 S BABCOCK ST MELBOURNE FL 32901
3217279096 FAX 3217270810
dnadav@aol.com
AR0015738 WWW.DNA–ARCHITECTS.COM

THESE PLANS ARE AN INSTRUMENT OF SERVICE AND ARE THE PROPERTY OF THE ARCHITECT.INFRINGEMENTS WILL BE PROSECUTED.

DNA

PROJECT: NEW BUILDING FOR:
TIFFANY NAILS & SPA
AIA INDIALANTIC FL

DRAWING

FINISH SCHEDULE

DATE: 2.15.21 DRAWN BY: DN
SCALE: CHECKED BY:

A.16

REV	DATE	DESCRIPTION	BY

TIFFANY'S BEACHSIDE

SECTION 31, TOWNSHIP 27S, RANGE 38E
INDIALANTIC, FLORIDA

JANUARY 2021
REVISED: FEBRUARY 18, 2021
REVISED: MARCH 16, 2021

VICINITY MAP

DRIVING DIRECTIONS: FROM US1 TAKE US192 AND HEAD EAST OVER THE BRIDGE TO A1A. HEAD NORTH TO WATSON DR. TO SITE ON THE WEST CORNER OF THE INTERSECTION.

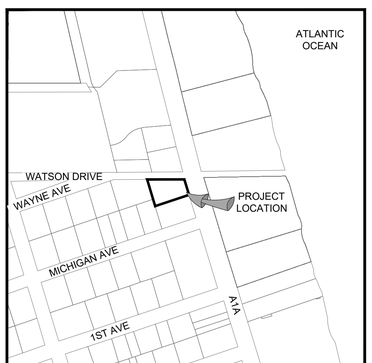

LOCATION MAP

OWNER

PAUL & JOHN BECKWITH TRUSTEE
2 HOLLY CIRCLE
INDIALANTIC, FL 32903

APPLICANT

HUNG NGUYEN
TIFFANY'S SPA AND NAIL, INC.
2642 SHELLWOOD DRIVE
MELBOURNE, FL 32934

ENGINEER

MBV ENGINEERING, INC.
MOIA BOWLES VILLAMIZAR & ASSOCIATES

CIVIL ▪ STRUCTURAL ▪ SURVEYING ▪ ENVIRONMENTAL
1250 W. EAU GALLIE BLVD., SUITE H
MELBOURNE, FL 32935
PH: (321) 253-1510
VERO BEACH, FL - PH: (772) 569-0035
FT. PIERCE, FL - PH: (772) 468-9055
PALM CITY, FL - PH: (772) 426-9959

SURVEYOR

BRIEL & ASSOCIATES
Land Surveyors, Inc.
1790 HWY. A1A - SUITE 208
SATELLITE BEACH, FL 32937
(321)773-7775

Sheet List Table

Sheet Number	Sheet Title
C-01	COVER SHEET
C-02	GENERAL NOTES
C-03	EXISTING SITE AND DEMOLITION PLAN
C-04	EROSION CONTROL DETAILS
C-05	SITE PLAN
C-06	PAVING, GRADING, AND DRAINAGE PLAN
C-07	UTILITY PLAN
C-08	SECTIONS
C-09	NEIGHBORHOOD CONNECTION PLAN
C-10	GENERAL DETAILS
C-11	FDOT DETAILS
C-12	UTILITY DETAILS
L-01	LANDSCAPING PLAN

72 HOURS BEFORE DIGGING CALL TOLL FREE 811
Know what's below. Call before you dig.

REQUIRED PERMITS

TOWN OF INDIALANTIC SITE PLAN APROVAL
SJRWMD 10-2
CITY OF MELBOURNE WATER
BREVARD COUNTY SEWER
FDOT DRIVEWAY EXEMPTION
FDOT DRAINAGE EXEMPTION
FDOT UTILITY PERMIT

TOWN OF INDIATLANTIC

TOWN PERMIT NUMBER:

FDOT

FDOT PERMIT NUMBER: 2021-A-590-00003
2021-D-590-00002

BRUCE A. MOIA
LICENSE
No. 47529
STATE OF FLORIDA
PROFESSIONAL ENGINEER

BRUCE A. MOIA
FL. P.E. #47529
DATE: 3/16/2021

DATE: 3/16/2021

PROJECT: 20-1060

SHEET
C-01

PRELIMINARY SET

CONSTRUCTION NOTES

1. THE CONTRACTOR IS ADVISED TO THOROUGHLY REVIEW THIS PLAN PACKAGE SO AS TO BE TOTALLY PREPARED TO PRESENT HIS BID PRICES IN THE CONTRACT DOCUMENTS. THE PLAN PACKAGE SUFFICIENTLY DELINEATES THE SCOPE AND INTENT OF THE ROADWAY WORK TO BE ACCOMPLISHED. IT WILL, THEREFORE, BE INCUMBENT ON THE CONTRACTOR TO ADJUST HIS FEE DOLLARS TO REFLECT ANY AND ALL ITEMS WHICH MAY NOT BE CLEARLY OUTLINED OR THOSE ITEMS WHICH MAY NOT BE INDICATED BUT WHICH ARE NECESSARY FOR THE SUCCESSFUL COMPLETION OF THIS PROJECT WITHOUT ADDITIONAL COSTS TO THE OWNER.
2. ALL CONSTRUCTION SHALL BE IN ACCORDANCE WITH TOWN OF INDIATLANTIC AND FDOT STANDARDS AND SPECIFICATIONS.
3. THE INFORMATION SHOWN ON THESE DRAWINGS CONCERNING TYPE AND LOCATION OF UNDERGROUND AND OTHER UTILITIES IS BASED ON AVAILABLE RECORDS AND IS NOT GUARANTEED TO BE ACCURATE OR ALL INCLUSIVE. THE CONTRACTOR IS RESPONSIBLE FOR MAKING HIS OWN DETERMINATION AS TO THE TYPE AND LOCATION OF UNDERGROUND AND OTHER UTILITIES AS MAY BE NECESSARY TO AVOID DAMAGE THERETO AND IS RESPONSIBLE FOR THE COORDINATION OF UTILITY RELOCATION.
4. CONTRACTOR SHALL LOCATE ALL EXISTING UTILITIES IN THE FIELD WITH UTILITY OWNER'S REPRESENTATIVE PRIOR TO CONSTRUCTION. UTILITY OWNERS LISTED BELOW.
5. IT IS THE RESPONSIBILITY OF THE CONTRACTOR TO NOTIFY ALL UTILITY COMPANIES A MINIMUM OF TWO WORKING DAYS PRIOR TO EXCAVATION, AS REQUIRED BY THE UNDERGROUND FACILITY DAMAGE PREVENTION AND SAFETY ACT. NOTIFY SUNSHINE AT 811.
6. UTILITIES ARE TO BE ADJUSTED BY UTILITY OWNER OR AS DIRECTED BY THE ENGINEER.
7. SURFACE INFORMATION SHOWN ON THESE DRAWINGS WAS OBTAINED FOR USE IN ESTABLISHING DESIGN CRITERIA FOR THE PROJECT. THE ACCURACY OF THIS INFORMATION IS NOT GUARANTEED AND IS NOT TO BE CONSTRUED AS PART OF THE PLANS GOVERNING CONSTRUCTION OF THE PROJECT. IT IS THE RESPONSIBILITY OF THE CONTRACTOR TO INQUIRE OF THE ENGINEER IF ADDITIONAL INFORMATION IS AVAILABLE, TO MAKE ARRANGEMENTS TO REVIEW SAME PRIOR TO BIDDING, AND IS TO MAKE HIS OWN DETERMINATION AS TO ALL SUBSURFACE CONDITIONS.
8. CONTRACTOR SHALL NOTIFY THE ENGINEER IF SOIL OR SUBSURFACE CONDITIONS UNSUITABLE FOR CONSTRUCTION ARE ENCOUNTERED.
9. ALL EXCAVATED SOILS DEEMED SUITABLE AS FILL MATERIAL AS DETERMINED BY THE ENGINEER SHALL BE UTILIZED ON SITE BY THE CONTRACTOR AT HIS OWN EXPENSE. THE EXACT LOCATION OF DELIVERY ON SITE SHALL BE DETERMINED BY THE ENGINEER. ALL EXCAVATED SOILS DEEMED UNSUITABLE SHALL BE DISPOSED OF BY THE CONTRACTOR AT HIS OWN EXPENSE.
10. ITEM IN CONFLICT WITH DESIGN SUCH AS EXISTING CURBS AND GUTTERS, SIDEWALKS, DRAINAGE STRUCTURES, PAVEMENT AND EXCESS EXCAVATIONS ARE TO BE REMOVED BY THE CONTRACTOR AND DISPOSED OF IN A LEGAL AND PROPER MANNER AWAY FROM THE JOB SITE AT HIS OWN EXPENSE.
11. IT SHOULD BE NOTED THAT THE OCCUPATIONAL SAFETY AND HEALTH ACT PROHIBITS THE OPERATING OF EQUIPMENT OR MACHINES CLOSER THAN TEN (10) FEET TO ENERGIZED ELECTRIC LINES RATES AT FIFTY KILOVOLTS OR BELOW. ALSO, NO EXCAVATION IS PERMITTED WITHIN FIVE (5) FEET OF POWER POLE FACILITIES.
12. ALL IRONS AND MONUMENTS (P.R.M.'S) SHOWN ON PLANS, OR FOUND, SHALL BE PRESERVED. THOSE SHOWN IN PROPOSED PAVEMENT SHALL BE PROTECTED WITH A CAST IRON VALVE BOX.
13. ANY PUBLIC LAND CORNERS WITHIN THE LIMITS OF CONSTRUCTION ARE TO BE PROTECTED. IF A CORNER MONUMENT IS IN DANGER OF BEING DESTROYED OR DISTURBED, THE CONTRACTOR WILL NOTIFY THE ENGINEER.
14. ALL EXISTING TREES WITHIN THE RIGHT OF WAY ARE TO BE REMOVED AS CLEARING AND GRUBBING UNLESS OTHERWISE NOTED.
15. WHEN REFERENCED TO, FDOT REFERS TO FLORIDA DEPARTMENT OF TRANSPORTATION ROADWAY AND TRAFFIC DESIGN STANDARDS,CURRENT EDITION.
16. THE CONTRACTOR SHALL RESTORE ALL AREAS DISTURBED BY CONSTRUCTION TO A CONDITION EQUAL TO, OR BETTER THAN, THAT NOW EXISTING.
17. BACKFILL, GRADE AND SOD AS REQUIRED AROUND ALL NEW CONSTRUCTION AND ALL DEVELOPED LOTS TO PREVENT EROSION. SEED AND MULCH WILL ONLY BE ALLOWED TO RESTORE UNDEVELOPED LOTS AFFECTED BY CONSTRUCTION OR AS DIRECTED BY THE ENGINEER.
18. SODDING TO BE USED AT LOCATIONS AS DIRECTED BY THE ENGINEER.
19. ALL DISTURBED AREAS DUE TO UTILITY TRENCHING WITHIN RIGHTS-OF-WAY NOT BENEATH PAVED SURFACES SHALL BE EITHER SODDED OR HYDROSEEDED.
20. PROPERTY OWNERS AND BUSINESSES WITHIN THE AREA OF CONSTRUCTION SHALL BE GIVEN ACCESS TO THEIR PROPERTY AT ALL TIMES DURING THE PERIOD OF CONSTRUCTION.
21. ALL MAILBOXES SHALL BE RELOCATED BY THE CONTRACTOR AS DIRECTED BY THE U.S. POSTAL MAIL CARRIER.
22. THE CONTRACTOR SHALL REMOVE, COVER OR OBLITERATE EXISTING ROADWAY SIGN AND PAVEMENT MARKINGS THAT CONFLICT WITH THE CONSTRUCTION TRAFFIC CONTROL PLANS.
23. CONTRACTOR TO PROTECT ALL SPRINKLER HEADS NOT IN CONFLICT WITH DESIGN AND RELOCATE ALL THOSE WHICH ARE IN CONFLICT TO A LOCATION DETERMINED IN FIELD.
24. SOD TWO (2) FEET MINIMUM ALONG SIDE PROPOSED EDGE OF PAVEMENT.
25. THE CONTRACTOR IS REQUIRED TO PERFORM HIS WORK IN ACCORDANCE WITH THE REQUIREMENTS OF THE VARIOUS PERMITS WHICH WILL BE OBTAINED PRIOR TO BEGINNING CONSTRUCTION.
26. THE CONTRACTOR SHALL PROVIDE ANY TEMPORARY DRAINAGE MEASURES AS REQUIRED TO ADEQUATELY DRAIN THE PROJECT AND ANY TEMPORARILY TRAVELED ROADWAYS. TEMPORARY DRAINAGE DESIGN, CONSTRUCTION AND MAINTENANCE IS THE CONTRACTOR'S RESPONSIBILITY; HOWEVER, ALL SUCH MEASURES MUST BE APPROVED BY THE ENGINEER.
27. THE EXISTING SIDEWALK SHALL NOT BE DISTURBED UNLESS OTHERWISE NOTED.
28. GRADES SHOWN ARE FINISHED GRADES.
29. SAWCUT CONCRETE OR ASPHALT DRIVEWAYS AS REQUIRED FOR REPLACEMENT.
30. ALL ABANDONED UTILITIES (INCLUDING PIPES, CABLES AND STRUCTURES) FOUND IN THE RIGHT OF WAY AND NOT SHOWN ON THE PLANS, ARE TO BE REMOVED AND PROPERLY DISPOSED OF AT THE EXPENSE OF THE CONTRACTOR. THIS INCLUDES ALL EXOTIC PIPES LIKE ASBESTOS-CEMENT PIPE. COST TO BE INCLUDED IN CLEARING AND GRUBBING ITEM.
31. DRIVEWAY LOCATIONS AND WIDTHS ARE APPROXIMATE AND ARE TO BE ADJUSTED AS NECESSARY OR AS DIRECTED BY THE ENGINEER.
32. BENCHMARK DATUM IN NAVD 1988.
33. BACKFILL AND SOD AS REQUIRED BEYOND RIGHT OF WAY LINES ON INDIVIDUAL LOTS TO MAINTAIN POSITIVE DRAINAGE FLOW INTO CURB AND GUTTER.
34. GRADE AND SOD SWALES TEN (10) FEET FROM PROPOSED DITCH BOTTOM INLETS AND MITERED END SECTIONS ON SIDE STREETS AS REQUIRED.
35. IT IS THE CONTRACTOR'S RESPONSIBILITY TO MAINTAIN ℒ (BASELINE) AND ℄ (CENTERLINE) CONSTRUCTION THROUGHOUT THE PROJECT.
36. THE CONTRACTOR SHALL SUBMIT A CONSTRUCTION SCHEDULE (SEQUENCE OF OPERATIONS) PRIOR TO THE PRE-CONSTRUCTION MEETING.
37. THE CONTRACTOR SHALL REMOVE DRIVEWAY APRONS AND DRIVEWAY CULVERTS AND SHALL MAINTAIN ROUGH GRADE FOR UTILITY MODIFICATIONS.
38. ALL EXISTING SWALES SHALL BE PROTECTED BY THE CONTRACTOR. ANY DAMAGE TO THE SWALE LINE SHALL BE CORRECTED BY THE CONTRACTOR AT HIS OWN EXPENSE.
39. PAYMENT FOR INCIDENTAL ITEMS NOT SPECIFICALLY COVERED IN THE INDIVIDUAL BID ITEMS SHALL BE INCLUDED IN THE CONTRACT PRICES FOR BID ITEMS.
40. MAINTAIN A MINIMUM OF ONE (1) FOOT CLEARANCE BETWEEN POWER POLE AND EDGE OF SIDEWALK.
41. WHEN ALL OTHER PERMANENT CONSTRUCTION IS COMPLETE, THE FINAL SURFACE COURSE SHALL BE PLACED.
42. CONSTRUCTION OPERATIONS FOR PLACEMENT OF THE FINAL SURFACE COURSE SHALL BE LIMITED TO A DISTANCE, AS DIRECTED BY THE ENGINEER, THE CONTRACTOR CAN COMPLETE IN ONE (1) DAY.
43. THE CONTRACTOR SHALL IMPLEMENT TEMPORARY PAVEMENT MARKINGS UNTIL THE FINAL SURFACE COURSE HAS CURED (MINIMUM THIRTY (30) DAYS AFTER FINAL SURFACE COURSE PLACEMENT). ANY TEMPORARY PAINTED MARKINGS PLACED ON THE FINAL.
44. PAVEMENT TRANSITION SHALL BE MADE IN ACCORDANCE WITH PAVEMENT TRANSITION DETAIL.

ROADWAY SPECIFICATIONS

GENERAL

IT IS INTENDED THAT THE FLORIDA DEPARTMENT OF TRANSPORTATION "STANDARD SPECIFICATIONS FOR ROAD AND BRIDGE CONSTRUCTION" MOST CURRENT EDITION BE USED WHERE APPLICABLE FOR VARIOUS WORK, AND THAT WHERE SUCH WORDING THEREIN REFERS TO THE STATE OF FLORIDA AND ITS DEPARTMENT OF TRANSPORTATION AND PERSONNEL, SUCH WORDING IS INTENDED TO BE REPLACED WITH THAT WORDING WHICH WOULD PROVIDE PROPER TERMINOLOGY, THEREBY MAKING SUCH "STANDARD SPECIFICATIONS FOR ROAD AND BRIDGE CONSTRUCTION" AS THE "STANDARD SPECIFICATIONS" FOR THIS PROJECT.

IF WITHIN THAT PARTICULAR SECTION ANOTHER SECTION, ARTICLE OR PARAGRAPH IS REFERRED TO, IT SHALL BE A PART OF THE STANDARD SPECIFICATIONS ALSO.

ALL WORK SHALL BE IN WORKMANLIKE MANNER AND SHALL CONFORM WITH ALL APPLICABLE CITY, COUNTY, STATE AND FEDERAL REGULATIONS AND/OR CODES. THE CONTRACTOR SHALL ALSO BE RESPONSIBLE FOR OBTAINING ALL PERMITS AND LICENSES REQUIRED TO BEGIN WORK.

THE CONTRACTOR SHALL GIVE THE ENGINEER 24 HOURS NOTICE PRIOR TO REQUESTING INSPECTIONS AND SHALL SUPPLY ALL EQUIPMENT NECESSARY TO PROPERLY TEST AND INSPECT THE COMPLETED WORK.

THE CONTRACTOR SHALL GUARANTEE ALL WORK AND MATERIALS FOR A PERIOD OF TWO YEARS FROM THE DATE OF PROJECT ACCEPTANCE, DURING WHICH ALL FAULTY CONSTRUCTION AND/OR MATERIALS SHALL BE CORRECTED AT THE CONTRACTOR'S EXPENSE.

GRADING

THE CONTRACTOR SHALL PERFORM ALL GRADING NECESSARY TO ACHIEVE THE PROPOSED PLAN GRADES INCLUDING TYPICAL SECTIONS.

ALL WORK SHALL BE IN ACCORDANCE WITH SECTION 120 OF THE STANDARD SPECIFICATIONS.

STAKING

CONSTRUCTION STAKING WILL BE PERFORMED BY THE CONTRACTOR.

STABILIZING

STABILIZED SUBGRADE SHALL BE CONSTRUCTED TO THE LIMEROCK BEARING RATIO (LBR) AS PER PLAN FOR THE DEPTH AND LIMITS SHOWN ON THE PLAN, AND IN ACCORDANCE WITH SECTION 160 OF THE STANDARD SPECIFICATIONS.

(TYPE C STABILIZATION). ALL STABILIZED AREAS SHALL BE COMPACTED TO AT LEAST 98% OF THE MAXIMUM DENSITY AS DETERMINED BY AASHTO T-180.

BASE COURSE

THE BASE SHALL BE CONSTRUCTED OF EITHER LIMEROCK MATERIAL IN ACCORDANCE WITH SECTION 911 OR CEMENTED COQUINA SHELL MATERIAL IN ACCORDANCE WITH SECTION 915 OF THE STANDARD SPECIFICATIONS.

LIMEROCK BASE AND CEMENTED COQUINA SHELL BASE SHALL BE CONSTRUCTED IN ACCORDANCE WITH SECTION 200 OF THE STANDARD SPECIFICATIONS. THE CONTRACTOR SHALL PROVIDE ROCK PIT CERTIFICATION FOR CEMENTED COQUINA SHELL MATERIAL. BASE SHALL BE COMPACTED BY AT LEAST 98% OF THE MAXIMUM DENSITY AS DETERMINED BY AASHTO T-180. BASE SHALL BE APPROVED PRIOR TO PRIME COAT.

PRIME AND TACK COAT

PRIME AND TACK COAT FOR THE BASE SHALL BE IN ACCORDANCE WITH SECTION 300 OF THE STANDARD SPECIFICATIONS.

ASPHALTIC CONCRETE SURFACE COURSE (A.C.S.C.)

TYPE S-I ACSC SHALL BE CONSTRUCTED FOR THE DEPTH AND LIMITS SHOWN ON THE PLAN, IN ACCORDANCE WITH SECTIONS 320, AND 330 OF THE STANDARD SPECIFICATIONS. ACCEPTABLE ALTERNATE IS SUPERPAVE IN ACCORDANCE WITH SECTION 334.

TESTING (ROAD & ASPHALT)

THE CONTRACTOR SHALL RETAIN THE SERVICES OF AN APPROVED INDEPENDENT TESTING LABORATORY TO CONDUCT ALL REQUIRED TESTS ON SUBGRADE, BASE AND SURFACE COURSE MATERIALS. TEST RESULTS MUST BE SUBMITTED PRIOR TO ANY REQUEST FOR PAYMENT ON THE ABOVE ITEMS.

THE SCHEDULE FOR TESTING OF THE ROAD CONSTRUCTION SHALL BE AS FOLLOWS:

A. SUBGRADE:
   1. LIMEROCK BEARING RATIO (LBR) TESTS SHALL BE TAKEN AT INTERVALS OF NOT MORE THAN 200 FEET, OR CLOSER AS MIGHT BE NECESSARY IN THE EVENT OF VARIATIONS IN SUBSOIL CONDITIONS.
   2. DENSITY TESTS SHALL BE TAKEN AT INTERVALS OF NOT MORE THAN 200 FEET OR CLOSER AS MIGHT BE NECESSARY.

B. BASE:
   1. DENSITY TESTS SHALL BE TAKEN AT INTERVALS OF NOT MORE THAN 500 FEET OR CLOSER AS MIGHT BE NECESSARY.

ALL TESTING SHALL BE TAKEN IN A STAGGERED SAMPLING PATTERN FROM A POINT 1 1/2 INCHES INSIDE THE LEFT EDGE, TO THE CENTER, TO A POINT 12 INCHES INSIDE THE RIGHT EDGE OF THE ITEM TESTED.

IF ANY TEST INDICATES THAT THE WORK DOES NOT MEET THE SPECIFICATIONS, THE SUBSTANDARD AREA SHALL BE REWORKED OR CORRECTED AND RETESTED, AT THE CONTRACTOR'S EXPENSE, UNTIL THE PROVISIONS OF THESE SPECIFICATIONS ARE MET.

ALL PASSING TESTS SHALL BE PAID FOR BY THE DEVELOPER. ALL FAILING TESTS SHALL BE PAID FOR BY THE CONTRACTOR.

TESTING (DRAINAGE)

THE CONTRACTOR SHALL VIDEO INSPECT ALL STORM PIPE WITHIN HIBISCUS RIGHT-OF-WAY AND PROVIDE COPIES TO ENGINEER OF RECORD AND CITY OF MELBOURNE.

CLEAN-UP

THE CONTRACTOR MUST PROVIDE CLEAN-UP OF EXCESS CONSTRUCTION MATERIAL UPON COMPLETION OF THE PROJECT. THE SITE MUST BE LEFT IN A NEAT, CLEAN, GRADED CONDITION.

DRAINAGE SPECIFICATIONS

STORM INLETS AND MANHOLES SHALL BE CONSTRUCTED IN GENERAL ACCORDANCE WITH SECTION 425 OF THE STANDARD SPECIFICATIONS OF THE FLORIDA DEPARTMENT OF TRANSPORTATION.

CONCRETE SHALL HAVE A MINIMUM 28-DAY STRENGTH OF 3000 PSI.

ALL REINFORCING STEEL TO BE ASTM A 615-72 GRADE 40, FYP = 40,000 PSI, AND SHALL BE HANDLED AND PLACED IN ACCORDANCE WITH ACI 318-71.

PRECAST CONCRETE MANHOLES AND STORM INLETS MAY BE USED UPON THE ENGINEER'S APPROVAL OF THE MANUFACTURER'S SHOP DRAWINGS.

STORM SEWER CONSTRUCTION SHALL BE IN ACCORDANCE WITH SECTION 430 AND RELATED SECTIONS OF THE STANDARD SPECIFICATIONS OF THE FLORIDA DEPARTMENT OF TRANSPORTATION.

CONCRETE

UNLESS OTHERWISE SPECIFIED OR INDICATED, ALL CONCRETE SHALL HAVE A MINIMUM COMPRESSIVE STRENGTH AT 28 DAYS OF 3000 PSI. ALL WORK SHALL COMPLY WITH THE CURRENT EDITION OF THE AMERICAN CONCRETE INSTITUTE (ACI) BUILDING CODE AND THE APPLICABLE BUILDING CODES HAVING JURISDICTION IN THE AREA.

CULVERT PIPES

REINFORCED CONCRETE PIPE (R.C.P.) SHALL BE IN ACCORDANCE WITH SECTION 449 OF THE STANDARD SPECIFICATIONS.

PRECAST CONCRETE DRAINAGE PRODUCTS

ALL PRECAST CONCRETE DRAINAGE PRODUCTS (INCLUDING BUT NOT LIMITED TO ROUND CONC. PIPE. ELLIPTICAL CONC. PIPE, UNDERDRAINS, MANHOLES, INLETS, ENDWALLS, JUNCTION BOXES, THREE SIDED CONC. CULVERTS, AND CONC. BOX CULVERTS) SHALL BE IN ACCORDANCE WITH SECTION 449 OF THE STANDARD SPECIFICATIONS.

RECORD DRAWINGS

CONTRACTOR SHALL KEEP AND MAINTAIN RECORD DRAWINGS ON THE PROJECT SITE AT ALL TIMES WHICH SHALL BE ANNOTATED BY THE CONTRACTOR DEPICTING ANY CHANGES MADE IN THE FIELD WHICH DIFFER FROM THE CONTRACT DRAWINGS. RECORD DRAWINGS SHALL INCLUDE, BUT NOT LIMITED TO, INVERT AND TOP ELEVATIONS OF CULVERTS AND INLET STRUCTURES. CONTRACTOR SHALL SUBMIT COMPLETE AND FINAL RECORD DRAWINGS TO ENGINEER UPON COMPLETION OF PROJECT AND PRIOR TO FINAL INSPECTION AND FINAL PAYMENT.

DRAINAGE SPECIFICATIONS (CONTINUED)

INSPECTION

MINIMUM CONSTRUCTION INSPECTION CHECKPOINTS

THE ENGINEER SHALL BE NOTIFIED:
1. PRIOR TO ANY MAJOR DEVIATION FROM THE APPROVED PLANS.
2. PRIOR TO BACKFILLING ANY PIPE TRENCHES.
3. UPON COMPLETION OF SUBGRADE GRADING AND COMPACTION.
4. UPON BEGINNING OF SPREADING OF ROCK BASE MATERIAL.
5. UPON COMPLETION OF GRADING AND COMPACTION OF THE BASE MATERIAL AND PRIOR TO PRIMING.
6. IMMEDIATELY PRIOR TO AND UPON APPLICATION OF A.C.S.C.
7. UPON COMPLETION OF CONSTRUCTION.

CONSTRUCTION IN STREETS AND RIGHT-OF-WAYS

1. OPEN ROAD CUTS REQUIRES PRIOR APPROVAL OF THE CITY, COUNTY, STATE OR ANY OTHER AGENCY WHICH MAY HAVE JURISDICTION.
2. ALL CONSTRUCTION, MATERIALS AND WORKMANSHIP ARE TO BE IN ACCORDANCE WITH FLORIDA DEPARTMENT OF TRANSPORTATION SPECIFICATIONS AND STANDARDS.
3. ALL AREAS IN EXISTING RIGHT-OF-WAYS DISTURBED BY CONSTRUCTION SHALL RECEIVE SOLID SOD.
4. THE CONTRACTOR SHALL COMPLY WITH ALL RULES AND REGULATIONS OF THE STATE, COUNTY AND CITY AUTHORITIES REGARDING CLOSING OR RESTRICTING THE USE OF PUBLIC STREETS OR HIGHWAYS.
5. TRAFFIC CONTROL ON ALL COUNTY AND STATE HIGHWAY RIGHT-OF-WAYS SHALL MEET THE REQUIREMENTS OF THE MANUAL OF UNIFORM TRAFFIC CONTROL DEVICES (U.S. DOT/FHA) AND THE REQUIREMENTS OF THE STATE AND ANY LOCAL AGENCY HAVING JURISDICTION.

GENERAL NOTES:

1. CONTRACTOR IS RESPONSIBLE FOR CHECKING ACTUAL SITE CONDITIONS BEFORE STARTING CONSTRUCTION.
2. ANY DISCREPANCIES ON THE DRAWINGS SHALL BE BROUGHT TO THE ATTENTION OF THE ENGINEER BEFORE COMMENCING WORK.
3. CONTRACTOR SHALL OBTAIN COPIES OF ALL REQUIRED PERMITS BEFORE COMMENCING WORK. CONTRACTOR SHALL FAMILIARIZE HIMSELF OF ALL PERMIT CONDITIONS AND PERFORM ALL WORK AN ACCORDANCE WITH ALL SAID CONDITIONS.
4. CONTRACTOR SHALL BE RESPONSIBLE FOR LOCATION OF ALL EXISTING UTILITIES. THE CONTRACTOR SHALL CONTACT ALL CONCERNED UTILITIES AT LEAST 48 HOURS IN ADVANCE FOR CONSTRUCTION OPERATIONS.
5. NO FIELD CHANGES OR DEVIATIONS FROM DESIGN TO BE MADE WITHOUT PRIOR APPROVAL OF THE ENGINEER.
6. CONTRACTOR SHALL SUPPLY DENSITY TESTS TO ENGINEER ON ALL SUB-GRADE AND BASE. TESTS SHALL BE PREPARED PER AASHTO T-180 METHOD.
7. SLOPE GRADES FROM ELEVATIONS SHOWN TO EXISTING GRADE AT PROPERTY LINE. MAXIMUM SLOPE 3:1.
8. ENGINEER SHALL BE NOTIFIED AT LEAST 48 HOURS IN ADVANCE FOR ANY INSPECTION.
9. ALL TRAFFIC CONTROL DEVICES SHALL BE IN ACCORDANCE WITH M.U.T.C.D. STANDARDS.
10. ALL CONSTRUCTION SHALL BE IN ACCORDANCE WITH THE FLORIDA DEPARTMENT OF TRANSPORTATION "STANDARD SPECIFICATIONS FOR ROAD AND BRIDGE CONSTRUCTION", LATEST EDITION.
11. THE PRESENCE OF GROUNDWATER SHOULD BE ANTICIPATED ON THIS PROJECT. CONTRACTORS BID SHALL INCLUDE CONSIDERATION FOR ADDRESSING THIS ISSUE.
12. ALL STORMWATER INLETS SHALL HAVE A 6" MIN. SUMP BELOW LOWEST INVERT.
13. EROSION CONTROL FENCING MUST BE IN PLACE PRIOR TO GRADING.
14. PIPE LENGTHS AND SLOPES SHOWN ARE APPROXIMATE.
15. IF ANY EXISTING STRUCTURES TO REMAIN ARE DAMAGED DURING CONSTRUCTION IT SHALL BE THE CONTRACTORS RESPONSIBILITY TO REPAIR AND/OR REPLACE THE EXISTING STRUCTURE AS NECESSARY TO RETURN IT TO EXISTING CONDITIONS OR BETTER.
16. ALL STORM PIPE ENTERING STRUCTURES SHALL BE GROUTED TO ASSURE CONNECTION AT STRUCTURE IS WATERTIGHT.
17. CONTRACTOR SHALL ADJUST INLET/STRUCTURE OR CONNECTION LOCATION AS REQUIRED TO ENSURE PROPOSED STRUCTURES AND PIPES ARE IN PROPER ALIGNMENT AND MATCH SLOPE OF EXISTING PIPES OR CONNECTIONS.
18. THIS PLAN CONTEMPLATES ACCESS CONNECTIONS TO ADJACENT ROADS AS SHOWN.
19. FILL MATERIAL MAY NOT BE STOCKPILED HIGHER THAN SIX (6) VERTICAL FEET ONSITE PER TOWN OF INDIATLANTIC CODE.
20. DIMENSIONS SHOWN ARE TO EDGE OF PAVEMENT. RADII SHOWN ARE TO EDGE OF PAVEMENT.
21. ALL SIGNS SHALL BE MUTCD STANDARD.
22. ALL PAVEMENT MARKINGS, EXCEPT PARKING STALL STRIPING, SHALL BE THERMOPLASTIC PER TOWN OF INDIATLANTIC REQUIREMENTS.
23. WATER FOR FIRE FIGHTING PURPOSES SHALL BE INDICATED WITH A BLUE ROADWAY REFLECTOR, PLACE ONE FOOT OFF OF THE CENTERLINE OF THE ROAD FACING THE FIRE HYDRANT. THIS INCLUDES NEW AND EXISTING SOURCES.
24. CONTRACTOR SHALL ADJUST INLET/STRUCTURE OR CONNECTION LOCATION AS REQUIRED TO ENSURE PROPOSED STRUCTURES AND PIPES ARE IN PROPER ALIGNMENT AND MATCH SLOPE OF EXISTING PIPES OR CONNECTIONS.
25. ANY STATE AND FEDERAL PERMITS THAT MAY BE REQUIRED AS A RESULT OF LAND CLEARING AND LANDSCAPING ACTIVITIES ARE THE RESPONSIBILITY OF THE CONTRACTOR.
26. CONTRACTOR IS RESPONSIBLE TO PROTECT AND/OR REPLACE ALL SURVEY MONUMENTATION BY A LICENSED SURVEYOR IN THE STATE OF FLORIDA.

FIRE PREVENTION NOTES:

1. LANDSCAPING, OR ANY OTHER OBSTRUCTION SHALL NOT BE LOCATED WITHIN 7.5 FEET TO THE FRONT AND SIDES OR 4.5 FEET TO THE REAR OF ANY FIRE HYDRANT OR FIRE DEPARTMENT CONNECTION.
2. WATER FOR FIRE FIGHTING PURPOSES SHALL BE INDICATED WITH A BLUE ROADWAY REFLECTOR PLACED ONE FOOT OFF THE CENTERLINE OF THE ROAD FACING THE FIRE HYDRANT. THIS INCLUDES NEW AND EXISTING SOURCES.
3. WATER FOR FIRE FIGHTING PURPOSES SHALL BE AVAILABLE AT THE TIME COMBUSTIBLES ARE BROUGHT ON SITE.
4. NEW FIRE HYDRANTS SHALL BE POSITIONED NOT MORE THAN 8 FEET NOR LESS THAN 6 FEET OFF THE EDGE OF PAVEMENT. THE CENTER LINE OF THE STEAMER CONNECTION (4 ½") SHALL BE POSITIONED BETWEEN 18"-24" ABOVE FINISH GRADE (I.E. SODDED OR MULCHED). ALSO, ALL HYDRANTS SHALL BE READILY ACCESSIBLE WITHOUT THE NEED TO TRAVERSE SWALES, DITCHES ETC.

LEGEND

	ASPHALT PAVEMENT	— 23 —	EXISTING CONTOUR ELEVATION
	CONCRETE SIDEWALK	× 26.7	EXISTING SPOT SHOT
	STABILIZED DRIVE AREA	OAK 24"	EXISTING TREE AND SIZE
		SD	EXISTING STORM MANHOLE
	STORM MANHOLE	— W —	EXISTING WATER MAIN
	STORM INLET	— SS —	EXISTING SANITARY LINE
		— GAS —	EXISTING GAS LINE
	MITERED END SECTION	— OHW —	EXISTING OVERHEAD WIRES
		— F —	EXISTING FORCEMAIN
	PROPOSED STORM PIPE	— WM —	PROPOSED WATER MAIN
	EXISTING STORM PIPE	— S —	PROPOSED SANITARY LINE
SS	SANITARY MANHOLE	— GAS —	PROPOSED GAS LINE
	FIRE HYDRANT	— OHW —	PROPOSED OVERHEAD WIRES
		— FM —	PROPOSED FORCEMAIN

72 HOURS BEFORE DIGGING
CALL TOLL FREE
811
Know what's below.
Call before you dig.

UTILITY COMPANY INFORMATION:

WATER SERVICE CITY OF MELBOURNE 900 E STRAWBRIDGE AVE MELBOURNE, FL 32901 (321) 608-5106	SEWER SERVICE BREVARD COUNTY UTILITIES SERVICES 2725 JUDGE FRAN JAMEISON WAY VIERA, FL 32940 (321) 633-2091	ELECTRICAL POWER FLORIDA POWER & LIGHT 9001 ELLIS ROAD W. MELBOURNE, FL 32904 PAM DIAZ (321) 455-6105
NATURAL GAS FLORIDA CITY GAS COMPANY 4180 SOUTH U.S. 1 ROCKLEDGE, FL 32955 (321) 638-3424	CABLE TELEVISION SPECTRUM 1571 PALM BAY ROAD NE PALM BAY, FL 32905 (321) 757-6451	TELEPHONE BELLSOUTH 712 FLORIDA AVENUE MELBOURNE, FL 32922 STEVE BERGHANE (321) 690-2076

FLORIDA DEPARTMENT OF TRANSPORTATION NOTES:

1. SAW CUT EDGE OF EXISTING PAVED SHOULDER TO PROVIDE SMOOTH JOINT.
2. ALL DISTURBED AREAS WITHIN THE FDOT RIGHT-OF-WAY SHALL BE RESTORED WITH BERMUDA SOD. AREAS OUTSIDE THE PROJECT DISTURBED FROM CONSTRUCTION WILL BE RESTORED WITH SOD. SOD INSTALLED SHALL BE "CUT-IN" TO MATCH THE SURROUNDING AREAS. SOD BLOCKS SHALL BE PLACED WITH STAGGERED TRANSVERSE JOINT PER INDEX 570-010 PER THE 2019/20 FDOT STANDARD PLANS FOR ROAD CONSTRUCTION.
3. ALL PAVEMENT MARKINGS IN FDOT RIGHT-OF-WAY SHALL BE THERMOPLASTIC PER THE 2019/20 FDOT STANDARD PLANS FOR ROAD CONSTRUCTION, INDEX 711-001 AND SECTION 711 OF THE FDOT JULY 2019 SPECIFICATIONS FOR ROAD AND BRIDGE CONSTRUCTION.
4. EXISTING SIDEWALK WITH FDOT RIGHT OF WAY SHALL BE SAWCUT AND REMOVED TO THE NEAREST JOINT.
5. CONTRACTOR SCHEDULE PRE-CONSTRUCTION MEETING WITH FDOT PRIOR TO STARTING WORK IN FDOT RIGHT OF WAY.
6. ALL RAISED PAVEMENT MARKERS (RPM) INSTALLED WITHIN FDOT RIGHT-OF-WAY AND PROPOSED DRIVEWAY CONNECTION SHALL BE IN ACCORDANCE WITH FDOT 2020/21 STANDARD PLANS FOR ROADWAY CONSTRUCTION, INDEX 706-001 AND SECTION 706 OF THE FDOT JULY 2019 SPECIFICATIONS FOR ROAD AND BRIDGE CONSTRUCTION.
7. ALL WORK PERFORMED WITHIN THE FDOT RIGHT OF WAY SHALL BE IN ACCORDANCE WITH FDOT 2020/21 STANDARD PLANS FOR ROADWAY CONSTRUCTION, 2019 SPECIFICATIONS FOR ROAD AND BRIDGE CONSTRUCTION AND THE 2017 UTILITY ACCOMMODATION MANUAL.
8. ALL EXCAVATIONS WITHIN TEN (10) FEET OF THE TRAVEL LANES AND GREATER THAN THREE (3) INCHES DEEP MUST BE FILLED IN OR HAVE SHOULDER TREATMENT PLACED AT THE DROP-OFF PER INDEX 102-600 SHEET 9 OF 12 OF FDOT 2018/19 STANDARD PLANS FOR ROADWAY CONSTRUCTION AT THE END OF THE WORK DAY.
9. SAWCUT PAVED SHOULDER FROM THE BACK OF THE TRAVEL WAY LANE WHITE EDGE LINE STRIPE FOR A SMOOTH CONSTRUCTION JOINT.
10. ALL SIDEWALKS, RAMPS, AND CROSSWALKS SHALL BE CONSTRUCTED AND INSPECTED TO MEET CURRENT ADA REQUIREMENTS.

REV.	REVISIONS	DATE
8		
7		
6		
5		
4		
3		
2	COMMENTS	XX-XX-XXXX
1	INDIATLANTIC, FDOT, COUNTY COMMENTS	02-16-2021

JOB NO.	20-1060
DESIGNED	TAC
DRAWN	AFR
DATE	10-22-2020
CHECKED	BAM
DATE ISSUED	3/16/2021

MBV ENGINEERING, INC.
MOIA BOWLES VILLAMIZAR & ASSOCIATES
CIVIL ▪ STRUCTURAL ▪ SURVEYING ▪ ENVIRONMENTAL CA#3728
1250 W. EAU GALLIE BLVD, SUITE H
MELBOURNE, FLORIDA 32935
P: 321-253-1510 F:321-253-0911
ALSO WITH OFFICES IN:
VERO: 772-569-0035, FT PIERCE: 772-468-9055, PALM CITY: 772-426-9959

GENERAL NOTES

TIFFANY'S BEACHSIDE

TOWN OF INDIALANTIC FLORIDA

BRUCE A MOIA LICENSE No. 47529 STATE OF FLORIDA PROFESSIONAL ENGINEER

BRUCE A. MOIA DATE:
FL. P.E. #47529 3/16/2021

SHEET
C-02

20-1060

PRELIMINARY SET

W:\2020\20-1060 BEACHSIDE TIFFANYS\CAD\Site\20-1060 COVER-DETAILS.dwg 3/16/2021 2:57 PM TAINY C

STORMWATER POLLUTION PREVENTION NOTES

1. CONTRACTOR SHALL INCORPORATE BEST MANAGEMENT PRACTICES AND EROSION CONTROLS AS SHOWN OR NOTED ON THIS PLAN TO MINIMIZE OR ELIMINATE THE POTENTIAL FOR POLLUTION DISCHARGES.
2. CONTRACTOR SHALL BE RESPONSIBLE TO PERFORM ALL WORK AND MAINTAIN ALL DEVICES IN ACCORDANCE WITH FDEP NPDES STANDARDS.
3. CONTRACTOR SHALL PERFORM ALL REQUIRED INSPECTIONS AND REPORTING.
4. CONTRACTOR SHALL PROVIDE ADDITIONAL EROSION CONTROL DEVICES, AS MAYBE NECESSARY, TO PREVENT OFF-SITE POLLUTION DISCHARGES.
5. CONTRACTOR SHALL MAINTAIN UPDATED AND REVISED SWPP TO MATCH SITE CONDITIONS THROUGHOUT CONSTRUCTION.
6. CONTRACTOR SHALL REMOVE EROSION CONTROL DEVICES ONLY AFTER ALL DISTURBED AREAS ARE ADEQUATELY STABILIZED AS ACKNOWLEDGED BY APPLICABLE AGENCY INSPECTIONS.

DEWATERING PLAN NOTES

1. CONTRACTOR SHALL CONSTRUCT THE PROJECT IMPROVEMENTS WITHOUT DIRECT DEWATERING DISCHARGES TO OFF-SITE LOCATIONS.
2. ALL CONSTRUCTION METHODS FOR COMPLETION OF PROJECT IMPROVEMENTS INCLUDING DEWATERING SHALL BE COMPLETED IN A MANOR THAT WILL NOT:
   - A. WILL NOT CAUSE ADVERSE WATER QUANTITY IMPACTS TO RECEIVING WATERS AND ADJACENT LANDS.
   - B. WILL NOT CAUSE ADVERSE FLOODING TO ON-SITE PROPERTY.
   - C. WILL NOT ADVERSE IMPACTS TO EXISTING SURFACE WATER STORAGE AND CONVEYANCE CAPABILITIES.
   - D. WILL NOT ADVERSELY IMPACT THE VALUE OF FUNCTIONS PROVIDED TO FISH AND WILDLIFE AND LISTED SPECIES BY WETLANDS AND OTHER SURFACE WATERS.
   - E. WILL NOT ADVERSELY AFFECT THE QUALIFY OF RECEIVING WATER SUCH THAT THE WATER QUALITY STANDARDS SET FORTH IN CHAPTERS 62-3, 62-4, 62-302, 62-520, F.A.C., INCLUDING ANY ANTIDEGRADATION PROVISIONS OF RULES 62-4.242 (1)(A) AND (B), 62-4.242(2) AND (3), F.A.C., WILL BE VIOLATED.
   - F. WILL NOT CAUSE ADVERSE SECONDARY IMPACTS TO THE WATER RESOURCES.
   - G. WILL NOT ADVERSELY IMPACT THE MAINTENANCE OF SURFACE OR GROUND WATER LEVELS OR SURFACE WATER FLOWS ESTABLISHED ON CHAPTER 40C-8, F.A.C.
3. DIRECT DISCHARGE OR DISTURBANCE OF EXISTING WETLANDS TO REMAIN, SHALL NOT BE ALLOWED DURING DEWATERING OPERATIONS AND/OR EXCAVATION OF PONDS, UNLESS SPECIFICALLY NOTED OTHERWISE.
4. IF INSTALLATION OF ANY CONTROL STRUCTURES OCCUR PRIOR TO THE COMPLETION OF DEWATERING ALL WET DETENTION PONDS, CONTRACTOR IS TO PROVIDE HAIL BAILS OR FILTER CLOTH AROUND THE CONSTRUCTED CONTROL STRUCTURES.
5. CONTRACTOR MUST SUBMIT A TURBIDITY MONITORING PLAN TO DISTRICT FOR APPROVAL PRIOR TO THE COMMENCEMENT OF ANY CONSTRUCTION. THE IS TO INCLUDE, AT MINIMUM, THE LOCATIONS THAT SAMPLES WILL BE COLLECTED, WHO WILL COLLECT AND ANALYZE, THE SAMPLES, THE EQUIPMENT AND METHOD THAT WILL BE UTILIZED, AND REMEDIAL STEPS TO BE TAKEN IF TURBIDITY LEVELS EXCEED THE WATER QUALITY IS ALLOWED ABOVE BACKGROUND CONDITIONS IN THE AQUATIC PRESERVE, TURBIDITY SHOULD BE MONITORED ON A DAILY BASIS AND REPORTED WEEKLY DURING DISCHARGE.

EROSION AND SEDIMENTATION CONTROL

1. THE LAND-DISTURBING ACTIVITY SHALL CONFORM TO EXISTING TOPOGRAPHY AND SOIL TYPE SO AS TO CREATE THE LOWEST PRACTICAL EROSION POTENTIAL.
2. LAND -DISTURBING ACTIVITIES SHALL BE CONDUCTED IN A MANNER MINIMIZING EROSION.
3. THE DISTURBED AREA AND THE DURATION OF EXPOSURE TO EROSIVE ELEMENTS SHALL BE KEPT TO A PRACTICAL MINIMUM.
4. EROSION CONTROL MUST BE STRICTLY MAINTAINED DURING CUT AND FILL OPERATIONS.
5. DISTURBED SOIL SHALL BE STABILIZED AS QUICKLY AS PRACTICAL.
6. WHENEVER FEASIBLE, NATURAL VEGETATION SHALL BE RETAINED, PROTECTED AND SUPPLEMENTED.
7. TEMPORARY VEGETATION OR MULCHING SHALL BE EMPLOYED TO PROTECT EXPOSED CRITICAL AREAS DURING DEVELOPMENT.
8. PERMANENT VEGETATION AND STRUCTURAL EROSION CONTROL MEASURES SHALL BE INSTALLED AS SOON AS PRACTICAL.
9. ADEQUATE PROVISIONS MUST BE PROVIDED TO MINIMIZE DAMAGE FROM SURFACE WATER TO CUT THE FACE OF EXCAVATIONS OR THE SLOPING SURFACE OF FILLS.
10. TO THE EXTENT NECESSARY, SEDIMENT IN RUNOFF WATER MUST BE TRAPPED BY THE USE OF DEBRIS BASINS, SEDIMENT BASINS, SILT TRAPS OR SIMILAR MEASURES UNTIL THE DISTURBED AREA IS STABILIZED.
11. CUTS AND FILLS MUST BE CONSTRUCTED IN SUCH A MANNER THAT EROSION AND RUNOFF FROM THE SITE DOES NOT ENDANGER ADJOINING PROPERTY.
12. CONTRACTOR TO PLACE SILT FENCE IN ALL AREAS WHERE THE POTENTIAL FOR OFFSITE EROSION EXISTS.

EXISTING NOTES:

1. BEARINGS BASED THE STATE PLANE COORDINATE SYSTEM FOR FLORIDA'S EAST ZONE, NORTH AMERICAN DATUM OF 1988.
2. ELEVATIONS BASED ON NAVD 1988 AND UNITED STATES COAST & GEODETIC SURVEY BENCHMARK F-304, PID AK4011.
3. FLOOD ZONE "X", MAP No. 12009C0602G COMMUNITY No. 125115, MARCH 17, 2014. FLOOD ZONE INFORMATION DEPICTED HEREON IS APPROXIMATE. FEMA RETAINS SOLE AUTHORITY REGARDING BOUNDARY AND EXTENT OF SFHA.
4. HORIZONTAL CLOSURE MEETS OR EXCEEDS THE ACCURACY REQUIREMENTS FOR SUBURBAN LAND AS PER FLORIDA STATUTE 5J-17-6.003.
5. BEARINGS, DISTANCES OR ANGLES SHOWN ARE THE SAME AS PLAT, DEED OR RECORD UNLESS SHOWN OTHERWISE.
6. NOT VALID WITHOUT THE SIGNATURE AND THE ORIGINAL RAISED SEAL OF A FLORIDA LICENSED SURVEYOR AND MAPPER. ADDITIONS OR DELETIONS TO SURVEY MAPS OR REPORTS BY OTHER THAN THE SIGNING PARTY OR PARTIES IS PROHIBITED WITHOUT WRITTEN CONSENT OF THE SIGNING PARTY.
7. THE SURVEYOR HAS NOT LOCATED NOR ATTEMPTED TO LOCATE ANY UNDERGROUND UTILITIES, FOUNDATIONS, OR STRUCTURES OTHER THAN THOSE THAT MAY BE SHOWN HEREON.
8. ONLY BOUNDARY CORNER MONUMENTS AS SHOWN HEREON ARE TO BE USED FOR THE LOCATION AND CONSTRUCTION OF IMPROVEMENTS.
9. UNLESS OTHERWISE INDICATED THIS SURVEY WAS PREPARED WITHOUT BENEFIT OF A TITLE SEARCH OR ATTORNEY'S TITLE OPINION.

DEMO NOTES:

1. THE CONTRACTOR SHALL DETERMINE LOCATIONS, SIZES, AND INVERTS OF EXISTING UTILITIES AND TAKE PROTECTIVE MEASURES WHEN NECESSARY PRIOR TO PROCEEDING WITH THE DEMOLITION PLAN.
2. THE CONTRACTOR SHALL PERFORM HIS WORK IN ACCORDANCE WITH REQUIREMENTS OF THE VARIOUS PERMITS INCLUDED IN THE BID SPECIFICATIONS. ENVIRONMENTAL CONTROLS SHALL BE USED AT LOCATIONS DESIGNATED IN THE PLANS AND/OR DESIGNATED BY THE ENGINEER.
3. THE INFORMATION SHOWN ON THESE DRAWINGS CONCERNING TYPE AND LOCATION OF UNDERGROUND AND OTHER UTILITIES IS BASED ON AVAILABLE RECORDS AND SURVEYS BUT IS NOT GUARANTEED TO BE ACCURATE OR ALL INCLUSIVE. THE CONTRACTOR SHALL MAKE HIS OWN DETERMINATION AS TO THE TYPE AND LOCATION OF UTILITIES AS MAY BE NECESSARY TO AVOID DAMAGE THERETO AND IS RESPONSIBLE FOR COORDINATING UTILITY RELOCATION WITH PROJECT CONSTRUCTION. PRIOR TO ORDERING DRAINAGE STRUCTURES, THE CONTRACTOR SHALL DETERMINE IF DRAINAGE/UTILITY CONFLICTS EXIST. INFORMATION ON CONFLICTS IS TO BE SUBMITTED TO THE OWNER'S REPRESENTATIVE AS SOON AS POSSIBLE AFTER DISCOVERY FOR RESOLUTION.
4. CONTRACTOR SHALL PULL TREE REMOVAL PERMIT FOR ANY TREES TO BE REMOVED. TREE CLEARING SHALL OCCUR AFTER CONFIRMATION WITH THE PLANNING DEPARTMENT AND A SEPARATE PERMIT FROM THE BUILDING DEPARTMENT.
5. ANY EXISTING SERVICE LINES THAT NEED TO BE REMOVED OR RELOCATED MUST BE CUT/CAPPED AT THE CORPORATION STOP AT THE MAIN AND RUN A NEW SERVICE LINE.
6. CONTRACTOR SHALL FIELD VERIFY THAT THE SHOULDER BASE IS FULL DEPTH. IF BASE DEPTH IS FOUND TO BE DEFICIENT, EXISTING SHOULDER BASE AND PAVEMENT SHALL BE REMOVED AND REPLACED AR THE PAVEMENT CONNECTION TO MATCH THE EXISTING ROADWAY
7. WHERE PROPOSED ASPHALT IS CONSTRUCTED ADJACENT TO EXISTING PAVEMENT, EXISTING ASPHALT SHALL BE SAWCUT AND REMOVED 12" FROM EDGE OF EXISTING ASPHALT TO OFFSET THE ASPHALT/BASE COURSE JOINT.

ABBREVIATION LEGEND

BPM = BLUE PAINT MARK
COM = COMMUNICATION
CONC = CONCRETE
CUP = CONCRETE UTILITY POLE
EB = ELECTRIC BOX
EL = ELEVATION
EOP = EDGE OF PAVEMENT
ESMT = EASEMENT
FH = FIRE HYDRANT
FN = FENCE
FND = FOUND
GA = GUY ANCHOR
INV = INVERT
IRC = IRON ROD & CAP
M = MEASURED
MH = MANHOLE
N&D = NAIL & DISK
NAVD 88 = NORTH AMERICAN VERTICAL DATUM OF 1988
NP = "NO PARKING" SIGN
OHW = OVERHEAD WIRE
OPM = ORANGE PAINT MARK
ORB = OFFICIAL RECORDS BOOK
P = PLAT
PG = PAGE
S/W = SIDEWALK
SD = STORM DRAIN
SS = SANITARY SEWER
SWL = SOLID SINGLE WHITE LINE
WD = WOOD
WUP = WOOD UTILITY POLE
WV = WATER VALVE
YGF = YELLOW GAS FLAG
YPM = YELLOW PAINT MARK

LEGAL DESCRIPTION:

PREPARED BY BRIEL & ASSOCIATES LAND SURVEYORS, INC.
LOT 12, BLOCK 62, PLAT OF INDIALANTIC BY THE SEA, AS RECORDED IN PLAT BOOK 3, PAGE 35 OF THE PUBLIC RECORDS OF BREVARD COUNTY, FLORIDA.

EXISTING CONCRETE PAVEMENT
EXISTING ASPHALT PAVEMENT
EXISTING TO BE REMOVED
STORM MANHOLE D
SANITARY MANHOLE S
SANITARY CLEAN OUT CO
FIRE HYDRANT FH
WOOD POWER POLE
STREET/PARKING LOT LIGHT
WATER VALVE
WATER METER
EXISTING SPOT SHOT ×26.7
EXISTING TREE AND SIZE XX"
EXISTING PROPERTY LINE
EXISTING WATER MAIN — W —
EXISTING SANITARY LINE — SS —
EXISTING GAS LINE — GAS —
EXISTING OVERHEAD WIRES — OHW —
EXISTING FENCE LINE — X —
EXISTING AT&T FIBER OPTIC LINE — UTIL —

72 HOURS BEFORE DIGGING CALL TOLL FREE 811 Know what's below. Call before you dig.

N

GRAPHIC SCALE
10 0 5 10
(IN FEET)
1 inch = 10 ft.

REVISIONS		DATE
8		
7		
6		
5		
4		
3		
2		
1	INDIATLANTIC, FDOT, COUNTY COMMENTS	02-16-2021
	COMMENTS	XX-XX-XXXX

JOB NO.	20-1060
DESIGNED	TAC
DRAWN	AFR
DATE	10-22-2020
CHECKED	BAM
DATE ISSUED	3/16/2021

MBV ENGINEERING, INC.
MOIA BOWLES VILLAMIZAR & ASSOCIATES
CIVIL ▪ STRUCTURAL ▪ SURVEYING ▪ ENVIRONMENTAL CA#3728
1250 W. EAU GALLIE BLVD, SUITE H
MELBOURNE, FLORIDA 32935
P: 321-253-1510 F:321-253-0911
ALSO WITH OFFICES IN:
VERO: 772-569-0035, FT PIERCE: 772-468-9055, PALM CITY: 772-426-9959

EXISTING SITE AND DEMOLITION PLAN

TIFFANY'S BEACHSIDE
TOWN OF INDIALANTIC FLORIDA

BRUCE A. MOIA LICENSE No. 47529 STATE OF FLORIDA PROFESSIONAL ENGINEER
BRUCE A. MOIA FL. P.E. #47529 DATE: 3/16/2021

SHEET
C-03

20-1060
PRELIMINARY SET

W:\2020\20-1060 BEACHSIDE TIFFANYS\CAD\Site\20-1060 EXST-DEMO-SITE.dwg 3/16/2021 2:58 PM TAINY

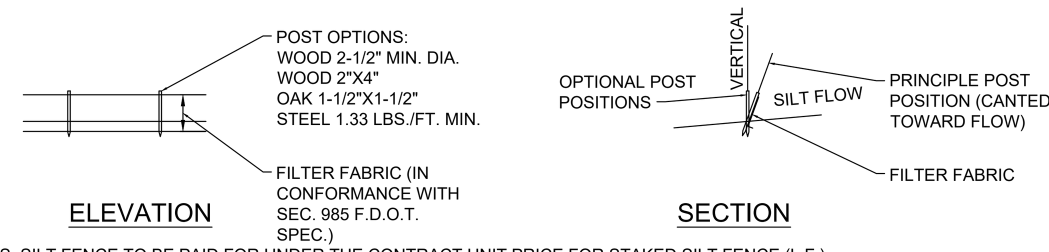

NOTES: SILT FENCE TO BE PAID FOR UNDER THE CONTRACT UNIT PRICE FOR STAKED SILT FENCE (L.F.)

TYPE III SILT FENCE

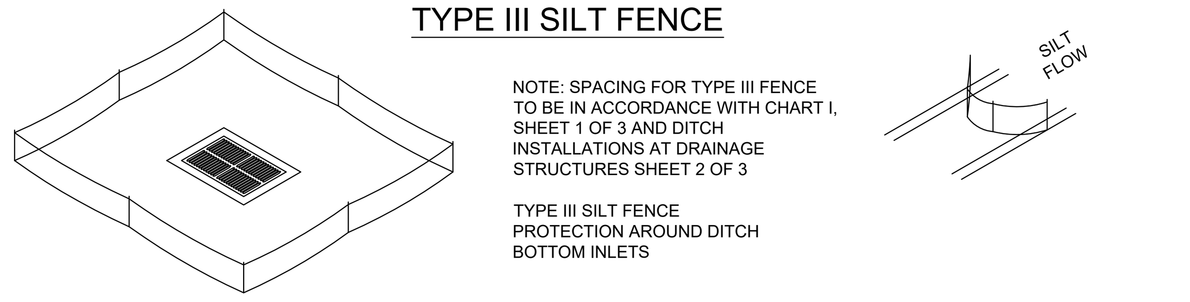

NOTE: SPACING FOR TYPE III FENCE TO BE IN ACCORDANCE WITH CHART I, SHEET 1 OF 3 AND DITCH INSTALLATIONS AT DRAINAGE STRUCTURES SHEET 2 OF 3

TYPE III SILT FENCE PROTECTION AROUND DITCH BOTTOM INLETS

DO NOT DEPLOY IN A MANNER THAT SILT FENCES WILL ACT AS A DAM ACROSS PERMANENT FLOWING WATERCOURSES. SILT FENCES ARE TO BE USED AT UPLAND LOCATIONS AND TURBIDITY BARRIERS USED AT PERMANENT BODIES OF WATER.

SILT FENCE APPLICATIONS

N.T.S.

NOTES:
1. SILT FENCE SHALL BE PLACED ON SLOPE CONTOURS TO MAXIMIZE PONDING EFFICIENCY.
2. INSPECT AND REPAIR FENCE AFTER EACH STORM EVENT AND REMOVE SEDIMENT WHEN NECESSARY. 9" MAXIMUM RECOMMENDED STORAGE HEIGHT.
3. REMOVED SEDIMENT SHALL BE DEPOSITED TO AN AREA THAT WILL NOT CONTRIBUTE SEDIMENT OFF-SITE AND CAN BE PERMANENTLY STABILIZED.

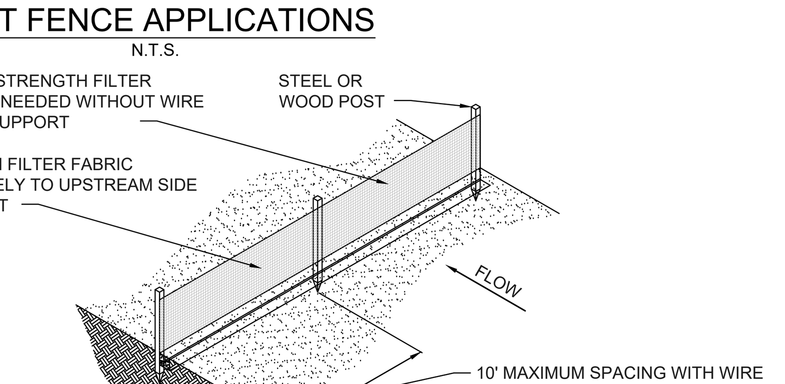

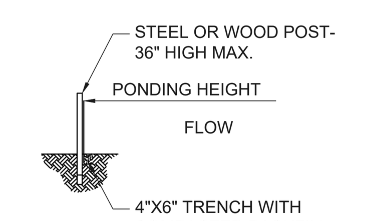

TRENCH DETAIL

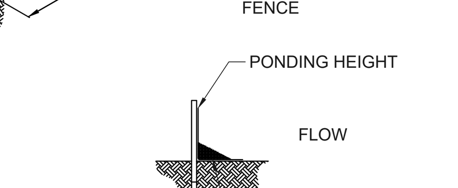

INSTALLATION WITHOUT TRENCHING

TYPE IV SILT FENCE

N.T.S.

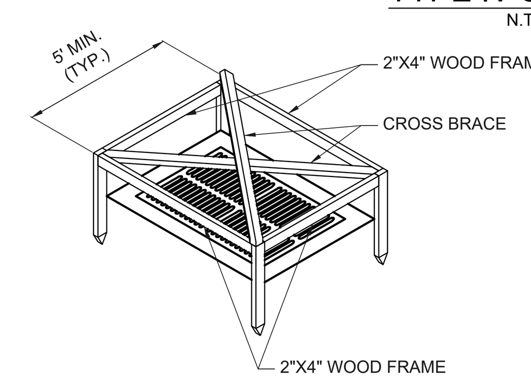

VIEW OF FRAME WITHOUT SILT FENCE

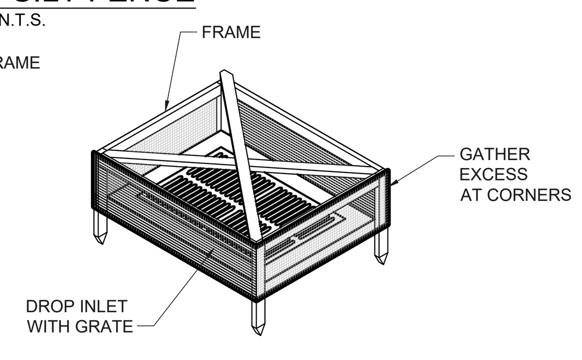

VIEW OF FRAME WITH SILT FENCE

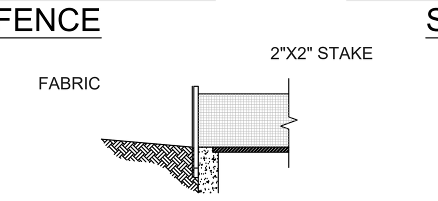

SILT FENCE INLET PROTECTION

N.T.S.

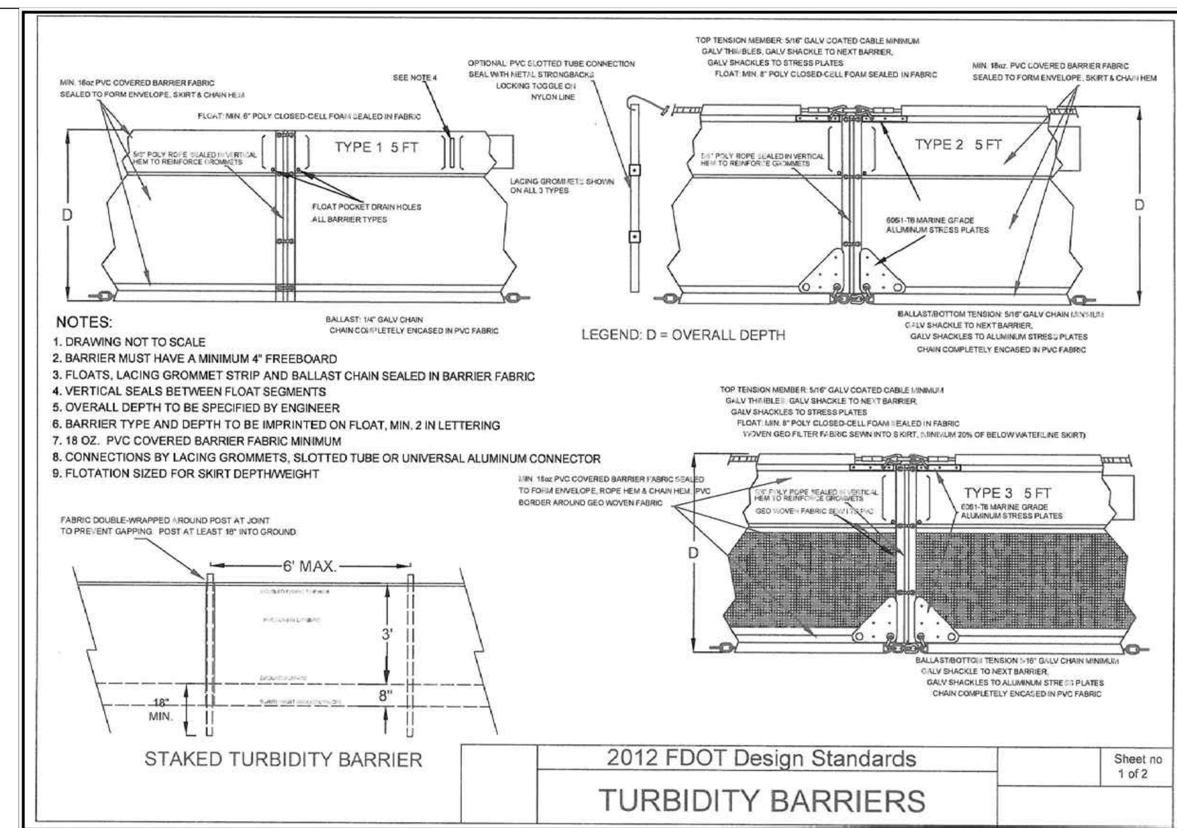

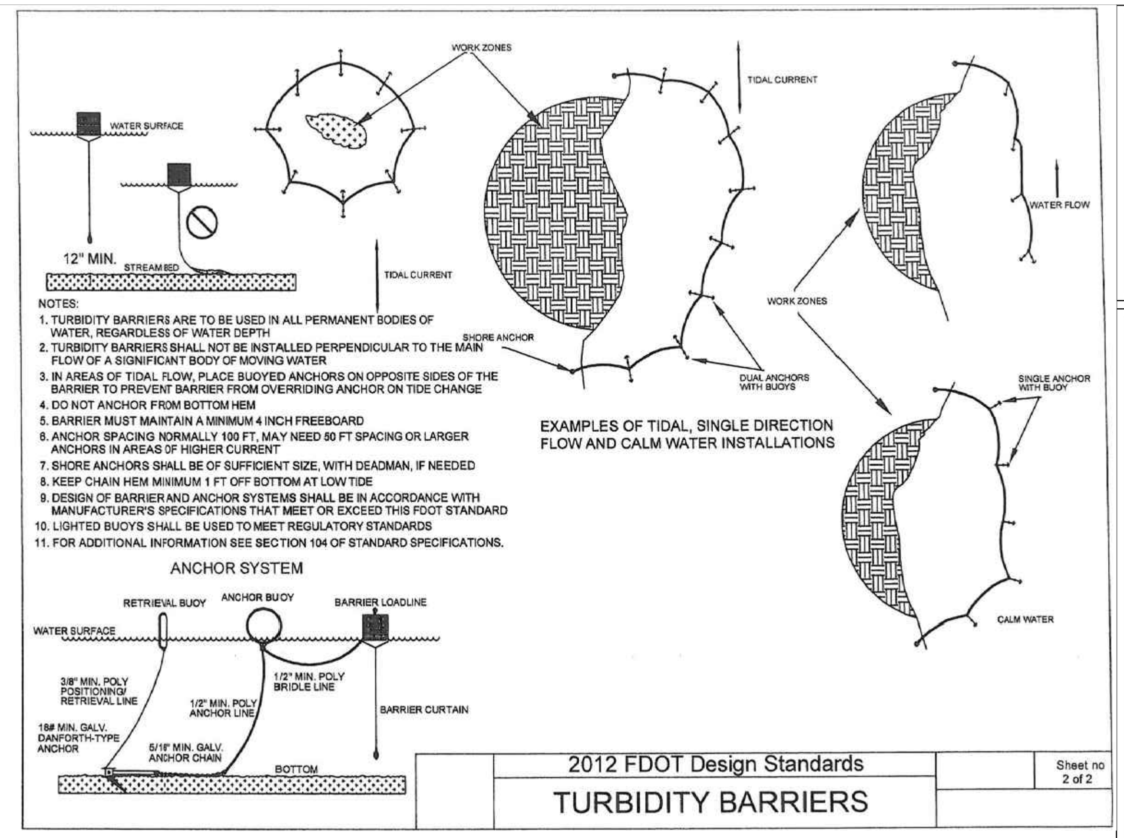

TURBIDITY BARRIER APPLICATIONS

N.T.S.

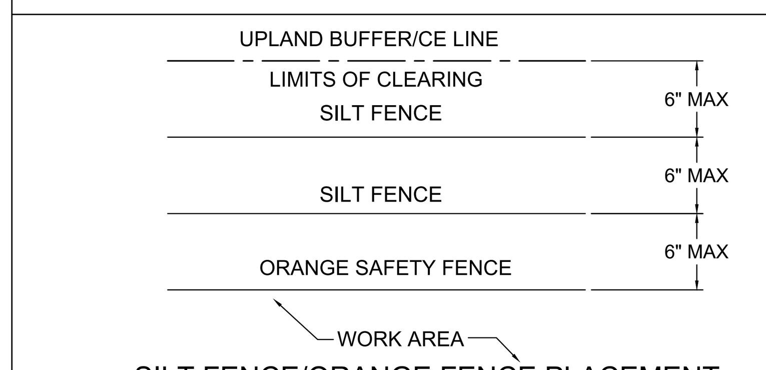

SILT FENCE/ORANGE FENCE PLACEMENT DETAIL AROUND WETLANDS

N.T.S.

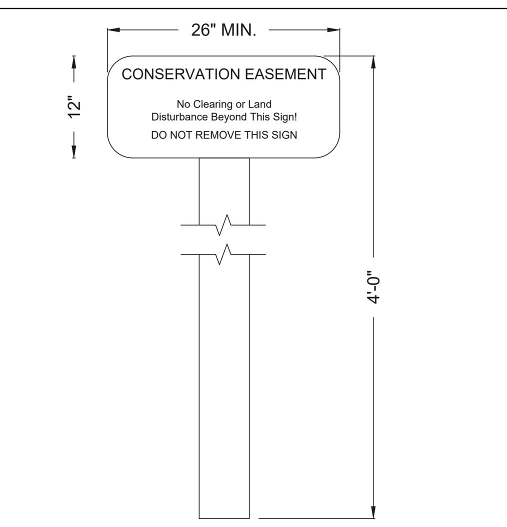

NOTE:
1. SIGN MATERIAL SHALL BE PLASTIC OR METAL, ATTACHED TO 4"x4" TREATED WOOD POST.
2. CONSERVATION EASEMENT SHALL BE 3" HIGH LETTERS.
3. ALL OTHER LINES OF TEXT SHALL BE 1" HIGH WITH 1" SPACING BETWEEN LINES.
4. SIGN SHALL HAVE WHITE BACKGROUND WITH CONTRASTING COLOR FOR THE LETTERING.
5. SIGNS SHALL BE PLACED AS SHOWN ON PLANS, BUT NO LESS THAN EVERY 200 LINEAR FEET AND AT VERTICES NOT CLOSER THAN 25 FEET AND IN NO CASE SHOULD EXCLUDE AREAS INCLUDED IN THE CONSERVATION EASEMENT.

CONSERVATION EASEMENT SIGN

N.T.S.

LOW TO MODERATE FLOW GEOTEXTILE FABRIC SPECIFICATION TABLE		
PROPERTIES	TEST METHOD	UNITS
GRAB TENSILE STRENGTH	ASTM D-4632	300 LBS.
GRAB TENSILE ELONGATION	ASTM D-4632	20%
PUNCTURE	ASTM D-4833	120 LBS.
MULLEN BURST	ASTM D-3786	800 P.S.I.
TRAPEZOID TEAR	ASTM D-4533	120 LBS.
UV RESISTANCE	ASTM D-4355	80%
APPARENT OPENING SIZE	ASTM D-4751	40 US SIEVE
FLOW RATE	ASTM D-4491	40 GAL./MIN./S.F.
PERMITTIVITY	ASTM D-4491	0.55 SEC. -1

MODERATE TO HIGH FLOW GEOTEXTILE FABRIC SPECIFICATION TABLE		
PROPERTIES	TEST METHOD	UNITS
GRAB TENSILE STRENGTH	ASTM D-4632	265 LBS.
GRAB TENSILE ELONGATION	ASTM D-4632	20%
PUNCTURE	ASTM D-4833	135 LBS.
MULLEN BURST	ASTM D-3786	420 P.S.I.
TRAPEZOID TEAR	ASTM D-4533	45 LBS.
UV RESISTANCE	ASTM D-4355	90%
APPARENT OPENING SIZE	ASTM D-4751	20 US SIEVE
FLOW RATE	ASTM D-4491	200 GAL./MIN./S.F.
PERMITTIVITY	ASTM D-4491	1.5 SEC. -1

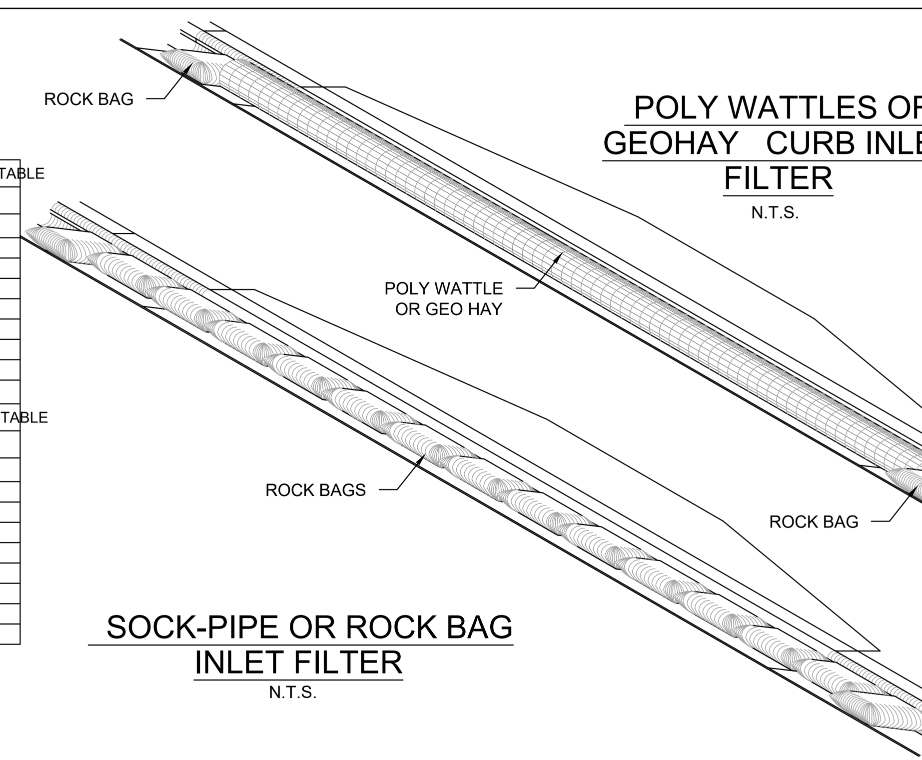

POLY WATTLES OR GEOHAY CURB INLET FILTER

N.T.S.

SOCK-PIPE OR ROCK BAG INLET FILTER

N.T.S.

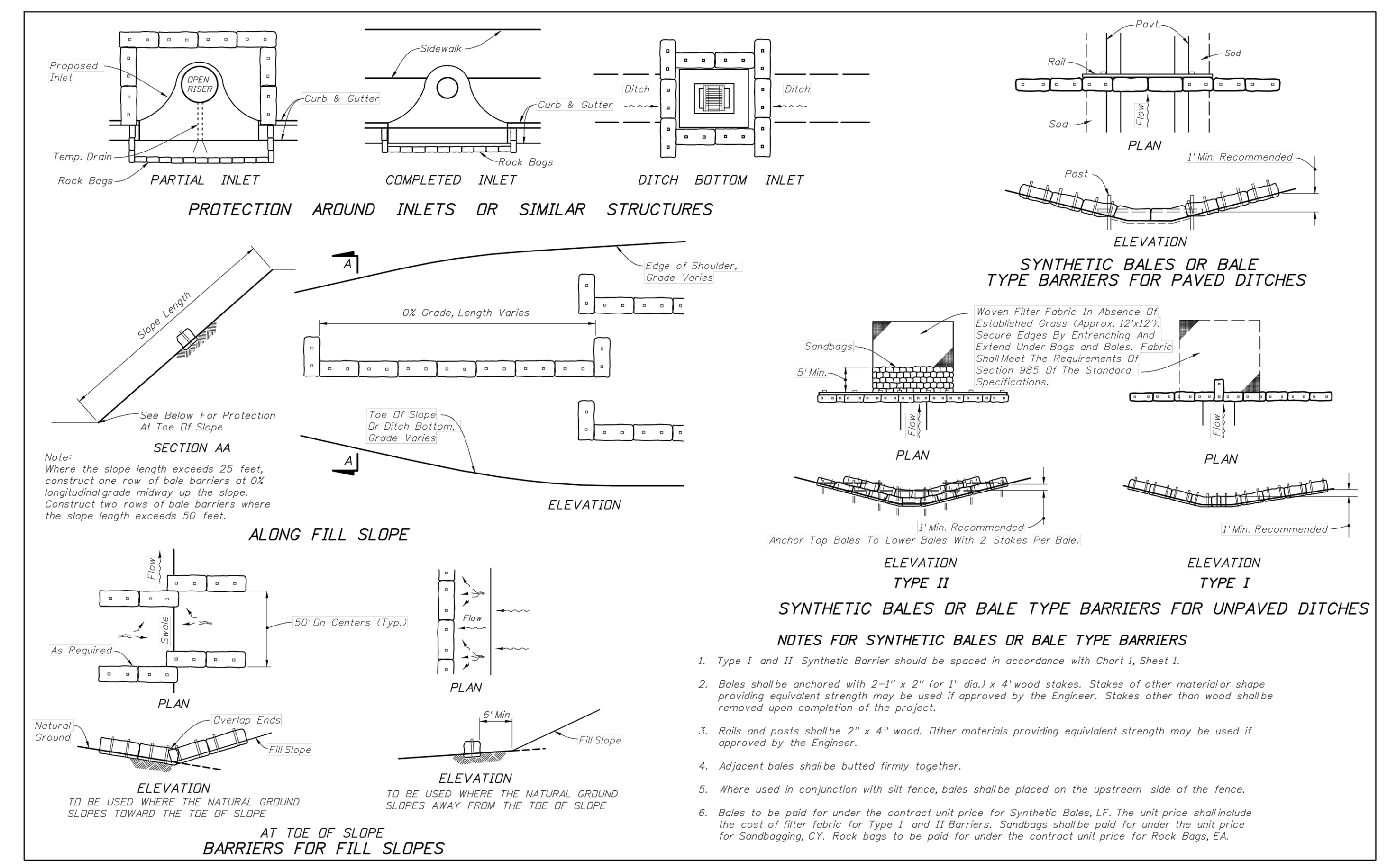

NOTES FOR SYNTHETIC BALES OR BALE TYPE BARRIERS

1. Type I and II Synthetic Barrier should be spaced in accordance with Chart I, Sheet 1.
2. Bales shall be anchored with 2-1" x 2" (or 1" dia.) x 4' wood stakes. Stakes of other material or shape providing equivalent strength may be used if approved by the Engineer. Stakes other than wood shall be removed upon completion of the project.
3. Rails and posts shall be 2" x 4" wood. Other materials providing equivlalent strength may be used if approved by the Engineer.
4. Adjacent bales shall be butted firmly together.
5. Where used in conjunction with silt fence, bales shall be placed on the upstream side of the fence.
6. Bales to be paid for under the contract unit price for Synthetic Bales, LF. The unit price shall include the cost of filter fabric for Type I and II Barriers. Sandbags shall be paid for under the unit price for Sandbagging, CY. Rock bags to be paid for under the contract unit price for Rock Bags, EA.

EROSION AND SEDIMENTATION CONTROL NOTES

CONSTRUCTION ACTIVITIES CAN RESULT IN THE GENERATION OF SIGNIFICANT AMOUNTS OF POLLUTANTS WHICH MAY REACH SURFACE OR GROUND WATERS. ONE OF THE PRIMARY POLLUTANTS OF SURFACE WATERS IS SEDIMENT DUE TO EROSION. EXCESSIVE QUANTITIES OF SEDIMENT WHICH REACH WATER BODIES OF FLOOD PLAINS HAVE BEEN SHOWN TO ADVERSELY AFFECT THEIR PHYSICAL, BIOLOGICAL AND CHEMICAL PROPERTIES. TRANSPORTED SEDIMENT CAN OBSTRUCT STREAM CHANNELS, REDUCE HYDRAULIC CAPACITY OF WATER BODIES OF FLOOD PLAINS, REDUCE THE DESIGN CAPACITY OF CULVERTS AND OTHER WORKS, AND ELIMINATE BENTHIC INVERTEBRATES AND FISH SPAWNING SUBSTRATES BY SILTATION. EXCESSIVE SUSPENDED SEDIMENTS REDUCE LIGHT PENETRATION AND THEREFORE, REDUCE PRIMARY PRODUCTIVITY.

MINIMUM STANDARDS

1. SEDIMENT BASIN AND TRAPS, PERIMETER DIKES, SEDIMENT BARRIERS AND OTHER MEASURES INTENDED TO TRAP SEDIMENT SHALL BE CONSTRUCTED AS A FIRST STEP IN ANY LAND-DISTURBING ACTIVITY AND SHALL BE MADE FUNCTIONAL BEFORE UNSLOPE LAND DISTURBANCE TAKES PLACE.
2. ALL SEDIMENT CONTROL MEASURES ARE TO BE ADJUSTED TO MEET FIELD CONDITIONS AT THE TIME OF CONSTRUCTION AND BE CONSTRUCTED PRIOR TO ANY GRADING OR DISTURBANCE OF EXISTING SURFACE MATERIAL ON BALANCE OF SITE. PERIMETER SEDIMENT BARRIERS SHALL BE CONSTRUCTED TO PREVENT SEDIMENT OR TRASH FROM FLOWING OR FLOATING ON TO ADJACENT PROPERTIES.
3. PERMANENT OR TEMPORARY SOIL STABILIZATION SHALL BE APPLIED TO DENUDED AREAS WITHIN SEVEN DAYS AFTER FINAL GRADE IS REACHED ON ANY PORTION OF THE SITE. TEMPORARY SOIL STABILIZATION SHALL BE APPLIED WITHIN SEVEN DAYS TO DENUDED AREAS THAT MAY NOT BE AT FINAL GRADE BUT WILL REMAIN UNDISTURBED FOR LONGER THAN 30 DAYS. PERMANENT STABILIZATION SHALL BE APPLIED TO AREAS THAT ARE TO BE LEFT UNDISTURBED FOR MORE THAN ONE YEAR.
4. DURING CONSTRUCTION OF THE PROJECT, SOIL STOCKPILES SHALL BE STABILIZED OR PROTECTED WITH SEDIMENT TRAPPING MEASURES. THE APPLICANT IS RESPONSIBLE FOR THE TEMPORARY PROTECTION AND PERMANENT STABILIZATION OF ALL SOIL STOCKPILES ON SITE AS WELL AS SOIL INTENTIONALLY TRANSPORTED FROM THE PROJECT SITE.
5. A PERMANENT VEGETATIVE COVER SHALL BE ESTABLISHED ON DENUDED AREAS NOT OTHERWISE PERMANENTLY STABILIZED. PERMANENT VEGETATION SHALL NOT BE CONSIDERED ESTABLISHED UNTIL A GROUND COVER IS ACHIEVED THAT, IN THE OPINION OF THE REVIEWER, IS UNIFORM, MATURE ENOUGH TO SURVIVE AND WILL INHIBIT EROSION.
6. STABILIZATION MEASURES SHALL BE APPLIED TO EARTHEN STRUCTURES SUCH AS DAMS, DIKES AND DIVERSIONS IMMEDIATELY AFTER INSTALLATION.
7. SURFACE RUNOFF FROM DISTURBED AREAS THAT IS COMPRISED OF FLOW FROM DRAINAGE AREAS GREATER THAN OR EQUAL TO THREE ACRES SHALL BE CONTROLLED BY A SEDIMENT BASIN. THE SEDIMENT BASIN SHALL BE DESIGNED AND CONSTRUCTED TO ACCOMMODATE THE ANTICIPATED SEDIMENT LOADING FROM THE LAND-DISTURBING ACTIVITY. THE OUTFALL DEVICE OR SYSTEM DESIGN SHALL TAKE INTO ACCOUNT THE TOTAL DRAINAGE AREA FLOWING THROUGH THE DISTURBED AREA TO BE SERVED BY THE BASIN.
8. AFTER ANY SIGNIFICANT RAINFALL, SEDIMENT CONTROL STRUCTURES WILL BE INSPECTED FOR INTEGRITY. ANY DAMAGED DEVICES SHALL BE CORRECTED IMMEDIATELY.
9. CONCENTRATED RUNOFF SHALL NOT FLOW DOWN CUT OR FILL SLOPES UNLESS CONTAINED WITHIN AN ADEQUATE TEMPORARY OR PERMANENT CHANNEL, FLUME OR SLOPE DRAIN STRUCTURE.
10. WHENEVER WATER SEEPS FROM A SLOPE FACE, ADEQUATE DRAINAGE OR OTHER PROTECTION SHALL BE PROVIDED.
11. SEDIMENT WILL BE PREVENTED FROM ENTERING ANY STORM DRAIN SYSTEM, DITCH OR CHANNEL. ALL STORM SEWER INLETS THAT ARE MADE OPERABLE DURING CONSTRUCTION SHALL BE PROTECTED SO THAT SEDIMENT-LADEN WATER CANNOT ENTER THE CONVEYANCE SYSTEM WITHOUT FIRST BEING FILTERED OR OTHERWISE TREATED TO REMOVE SEDIMENT.
12. BEFORE TEMPORARY OR NEWLY CONSTRUCTED STORMWATER CONVEYANCE CHANNELS ARE MADE OPERATIONAL, ADEQUATE OUTLET PROTECTION AND ANY REQUIRED TEMPORARY OR PERMANENT CHANNEL LINING SHALL BE INSTALLED IN BOTH THE CONVEYANCE CHANNEL AND RECEIVING CHANNEL.
13. WHEN WORK IN A LIVE WATERCOURSE IS PERFORMED, PRECAUTIONS SHALL BE TAKEN TO MINIMIZE ENCROACHMENT, CONTROL SEDIMENT TRANSPORT AND STABILIZE THE WORK AREA TO THE GREATEST EXTENT POSSIBLE DURING CONSTRUCTION. NONERODIBLE MATERIAL SHALL BE USED FOR THE CONSTRUCTION OF CAUSEWAYS AND COFFERDAMS. EARTHEN FILL MAY BE USED FOR THESE STRUCTURES IF ARMORED BY NONERODIBLE COVER MATERIALS.
14. WHEN A LIVE WATERCOURSE MUST BE CROSSED BY CONSTRUCTION VEHICLES, A TEMPORARY STREAM CROSSING CONSTRUCTED OF NONERODIBLE MATERIAL SHALL BE PROVIDED.
15. THE BED AND BANKS OF A WATERCOURSE SHALL BE STABILIZED IMMEDIATELY AFTER WORK IN THE WATERCOURSE IS COMPLETED.
16. PERIODIC INSPECTION AND MAINTENANCE OF ALL SEDIMENT CONTROL STRUCTURES MUST BE PROVIDED TO ENSURE INTENDED PURPOSE IS ACCOMPLISHED. THE DEVELOPER, OWNER AND/OR CONTRACTOR SHALL BE CONTINUALLY RESPONSIBLE FOR ALL SEDIMENT LEAVING THE PROPERTY. SEDIMENT CONTROL MEASURES SHALL BE IN WORKING CONDITION AT THE END OF EACH WORKING DAY.
17. UNDERGROUND UTILITY LINES SHALL BE INSTALLED IN ACCORDANCE WITH THE FOLLOWING STANDARDS IN ADDITION TO OTHER APPLICABLE CRITERIA:
    A. NO MORE THAN 500 LINEAR FEET OF TRENCH MAY BE OPENED AT ONE TIME.
    B. EXCAVATED MATERIAL SHALL BE PLACED ON THE UPHILL SIDE OF TRENCHES.
    C. EFFLUENT FROM DEWATERING OPERATIONS SHALL BE FILTERED OR PASSED THROUGH AN APPROVED SEDIMENT TRAPPING DEVICE, OR BOTH, AND DISCHARGED IN A MANNER THAT DOES NOT ADVERSELY AFFECT FLOWING STREAMS OR OFF-SITE PROPERTY.
    D. RESTABILIZATION SHALL BE ACCOMPLISHED IN ACCORDANCE WITH THESE REGULATIONS.
18. WHERE CONSTRUCTION VEHICLE ACCESS ROUTES INTERSECT PAVED PUBLIC ROADS, PROVISIONS SHALL BE MADE TO MINIMIZE THE TRANSPORT OF SEDIMENT BY TRACKING ONTO THE PAVED SURFACE, WHERE SEDIMENT IS TRANSPORTED ONTO A PUBLIC ROAD SURFACE WITH CURBS AND GUTTERS, THE ROAD SHALL BE CLEANED THOROUGHLY AT THE END OF EACH DAY. SEDIMENT SHALL BE REMOVED FROM THE ROADS BY SHOVELING OR SWEEPING AND TRANSPORTED TO A SEDIMENT CONTROL DISPOSAL AREA. STREET WASHING SHALL BE ALLOWED ONLY AFTER SEDIMENT IS REMOVED IN THIS MANNER. THIS PROVISION SHALL APPLY TO INDIVIDUAL SUBDIVISION LOTS AS WELL AS TO LARGER LAND-DISTURBING ACTIVITIES.
19. ALL TEMPORARY EROSION AND SEDIMENT CONTROL MEASURES SHALL BE REMOVED WITHIN 30 DAYS AFTER FINAL SITE STABILIZATION OR AFTER THE TEMPORARY MEASURES ARE NO LONGER NEEDED, IN THE OPINION OF THE REVIEWER. DISTURBED SOIL AREAS RESULTING FROM THE DISPOSITION OF TEMPORARY MEASURES SHALL BE PERMANENTLY STABILIZED TO PREVENT FURTHER EROSION AND SEDIMENTATION.
20. PROPERTIES AND WATERWAYS DOWNSTREAM FROM CONSTRUCTION SITE SHALL BE PROTECTED FROM SEDIMENT DISPOSITION AND EROSION.
21. PHASED PROJECTS SHOULD BE CLEARED IN CONJUNCTION WITH CONSTRUCTION OF EACH PHASE.
22. EROSION CONTROL DESIGN AND CONSTRUCTION SHALL FOLLOW THE REQUIREMENTS OF THE FLORIDA STORMWATER EROSION AND SEDIMENTATION CONTROL MANUAL (JULY 2018).
23. THE REVIEWER MAY APPROVE MODIFICATIONS OR ALTER PLANS TO THESE EROSION CONTROL CRITERIA DUE TO SITE SPECIFIC CONDITIONS.

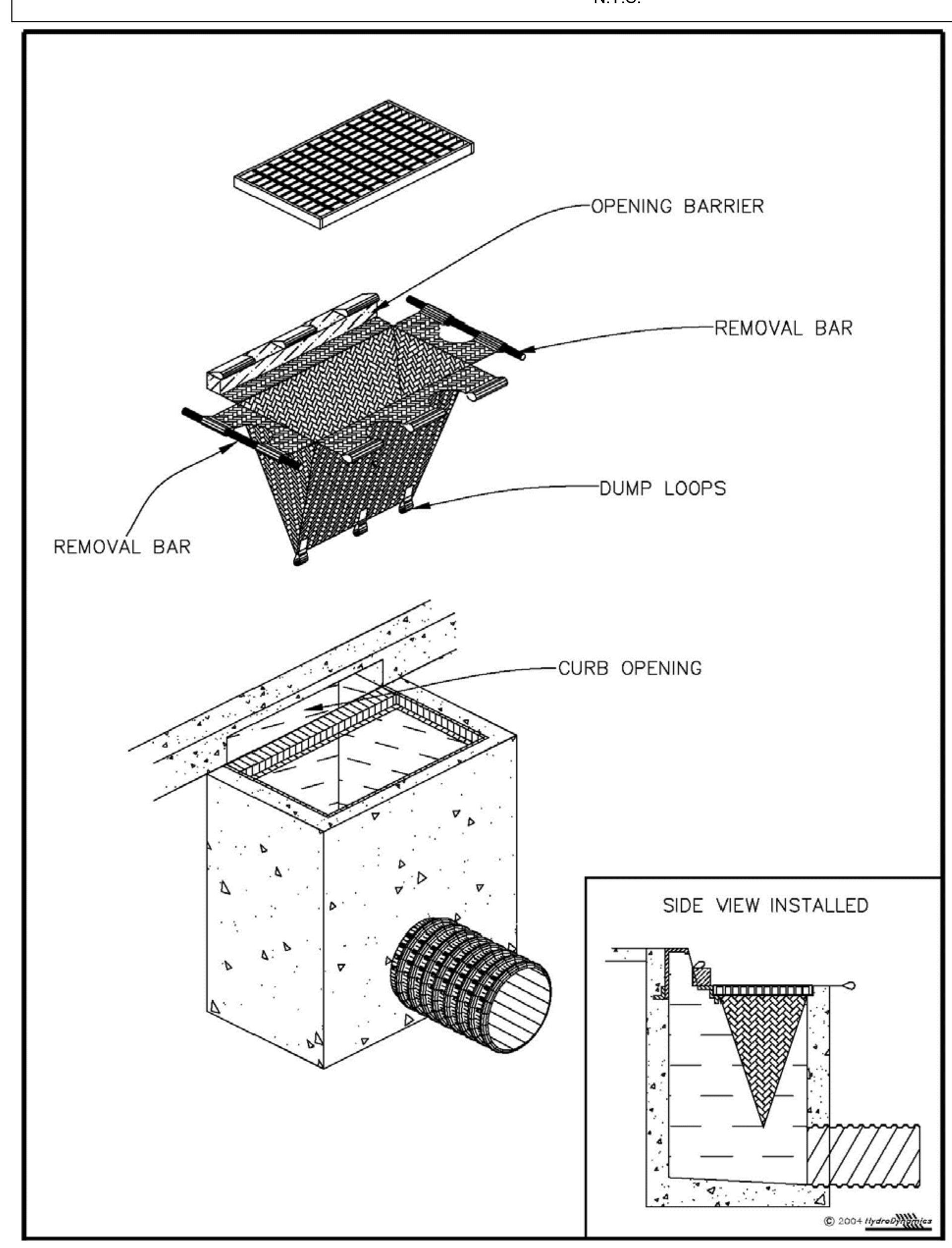

INLET INSERT SEDIMENT CONTAINMENT SYSTEM

N.T.S.

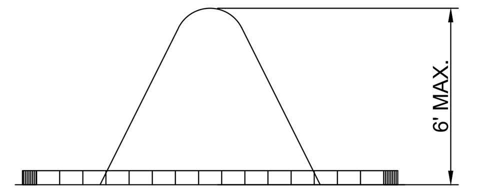

NOTE: ALL STOCKPILES SHALL BE A MAXIMUM OF 6' HIGH.

SECTION A-A

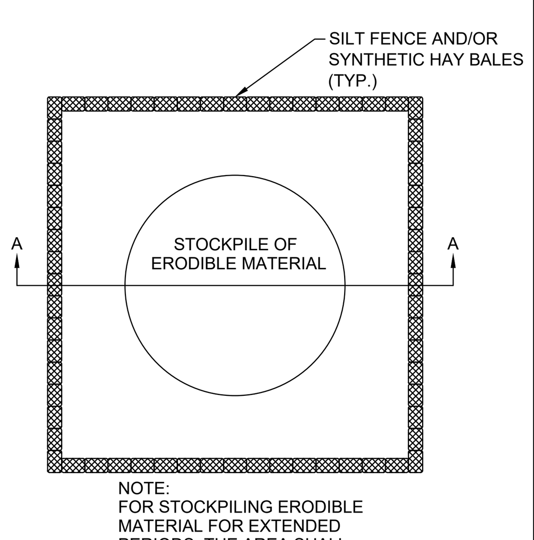

NOTE: FOR STOCKPILING ERODIBLE MATERIAL FOR EXTENDED PERIODS, THE AREA SHALL BE SEEDED AND MULCHED.

SEDIMENT CONTROL DETAIL FOR STOCKPILING OF ERODIBLE MATERIAL

N.T.S.

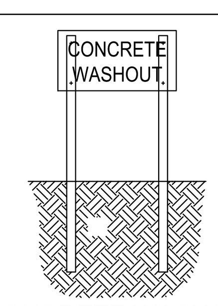

PLYWOOD, 4'X2' PAINTED WHITE
BLACK LETTERS 6" HEIGHT
LAG SCREWS (½" DIA.)
WOOD POSTS (4"X4"X9')

CONCRETE WASHOUT SIGN DETAIL (OR EQUIVALENT)

.12" DIA. STEEL WIRE

STAPLE DETAIL

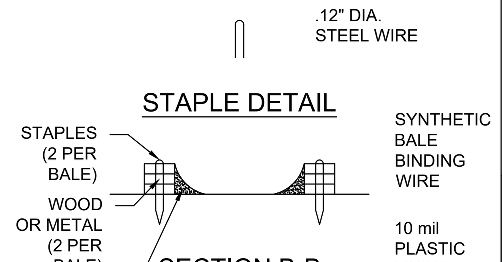

SECTION B-B

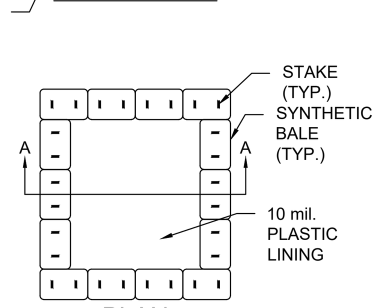

PLAN

NOTES:
1. ACTUAL LAYOUT DETERMINED IN THE FIELD.
2. THE CONCRETE WASHOUT SIGN SHALL BE INSTALLED WITHIN 30' OF THE TEMPORARY CONCRETE WASHOUT FACILITY.

TYPE "ABOVE GRADE" WITH SYNTHETIC BALES

CONCRETE & STUCCO WASTE MANAGEMENT

N.T.S.

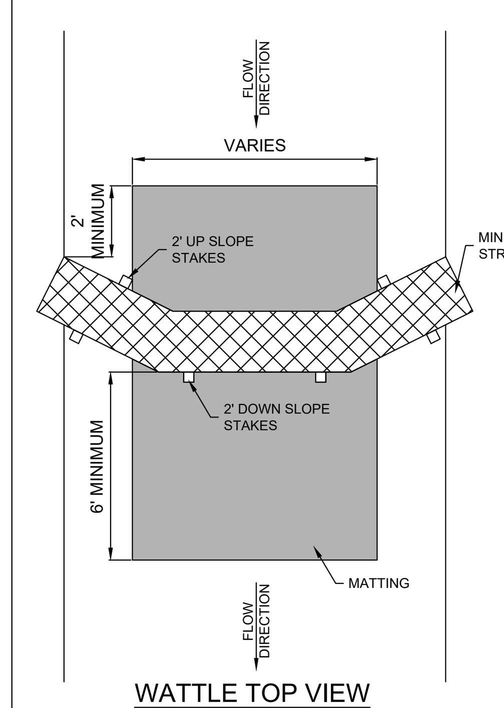

WATTLE TOP VIEW

N.T.S.

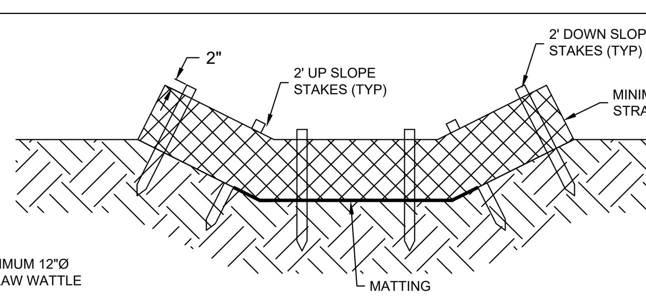

WATTLE CROSS SECTION

N.T.S.

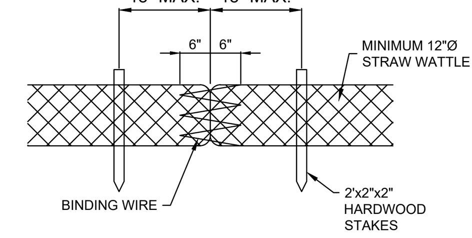

WATTLE JOINING DETAIL

N.T.S.

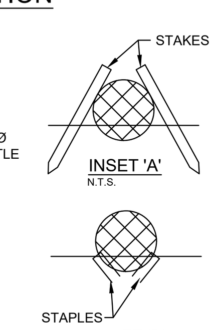

NOTES:
1. BEGIN AT THE LOCATION WHERE THE WATTLE IS TO BE INSTALLED BY EXCAVATING A 2"-3" DEEP x 9" WIDE TRENCH ALONG THE CONTOUR OF THE SLOPE. EXCAVATED SOIL SHOULD BE PLACED UP-SLOPE FROM THE ANCHOR TRENCH.
2. PLACE THE WATTLE IN THE TRENCH SO THAT IT CONTOURS TO THE SOIL SURFACE. COMPACT SOIL FROM THE EXCAVATED TRENCH AGAINST THE WATTLE ON THE UPHILL SIDE. ADJACENT WATTLES SHOULD OVERLAP 24" - SHINGLE IN DIRECTION OF FLOW.
3. SECURE THE WATTLE WITH 18"-24" STAKES EVERY 3'-4' AND WITH A STAKE ON EACH END. STAKES SHOULD BE DRIVEN THROUGH THE MIDDLE OF THE WATTLE LEAVING AT LEAST 2"-3" OF STAKE EXTENDING ABOVE THE WATTLE. STAKE SHOULD BE DRIVEN PERPENDICULAR TO SLOPE FACE.
4. USE MINIMUM 12"Ø COIR (COCONUT FIBER)/STRAW WATTLE.
5. USE 2' WOODEN STAKES WITH A 2"x2" NOMINAL CROSS SECTION.
6. ONLY INSTALL WATTLE(S) TO A HEIGHT IN DITCH SO FLOW WILL NOT WASH AROUND WATTLE AND SCOUR DITCH SLOPES AS DIRECTED.
7. INSTALL A MINIMUM OF 2 UP SLOPE STAKES AND 4 DOWN SLOPE STAKES AT AN ANGLE TO WEDGE WATTLE TO BOTTOM OF DITCH.
8. PROVIDE STAPLES MADE OF 0.125"Ø STEEL SIRE FORMED INTO A 'U; SHAPE NOT LESS THAN 12" IN LENGTH.
9. INSTALL STAPLES APPROX. EVERY 1 LINEAR FOOT ON BOTH SIDES OF WATTLE AND AT EACH END TO SECURE IT TO THE SOIL.

SYNTHETIC HAY BALE DETAILS

N.T.S.

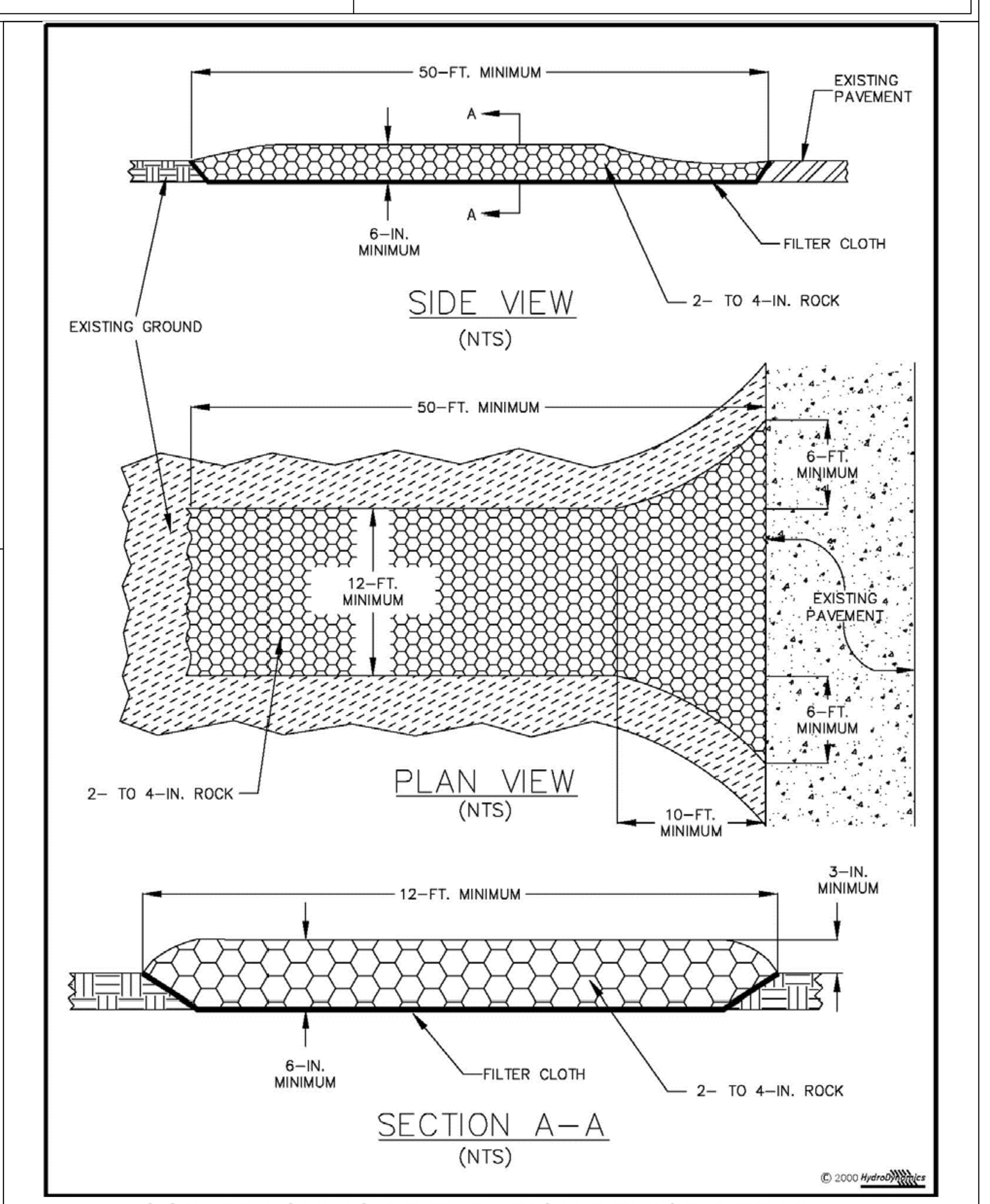

SOIL TRACKING PREVENTION DEVICE DETAIL

N.T.S.

REV.	COMMENTS	DATE
1	INDIATLANTIC, FDOT, COUNTY COMMENTS	02-16-2021
2		
3		
4		
5		
6		
7		
8		
		XX-XX-XXXX
△	REVISIONS	DATE

JOB NO.	20-1060
DESIGNED	TAC
DRAWN	AFR
DATE	10-22-2020
CHECKED	BAM
DATE ISSUED	3/16/2021

MBV ENGINEERING, INC.
MOIA BOWLES VILLAMIZAR & ASSOCIATES
CIVIL ■ STRUCTURAL ■ SURVEYING ■ ENVIRONMENTAL CA#3728
1250 W. EAU GALLIE BLVD, SUITE H
MELBOURNE, FLORIDA 32935
P: 321-253-1510 F:321-253-0911
ALSO WITH OFFICES IN:
VERO: 772-569-0035, FT PIERCE: 772-468-9055, PALM CITY: 772-426-9959

EROSION CONTROL DETAILS

TIFFANY'S BEACHSIDE

TOWN OF INDIALANTIC FLORIDA

BRUCE A MOIA LICENSE No. 47529 STATE OF FLORIDA PROFESSIONAL ENGINEER

BRUCE A. MOIA FL. P.E. #47529 DATE: 3/16/2021

SHEET

C-04

20-1060

PRELIMINARY SET

W:\2020\20-1060 BEACHSIDE TIFFANYS\CAD\Site\20-1060 COVER-DETAILS.dwg 3/16/2021 2:58 PM TAINY C

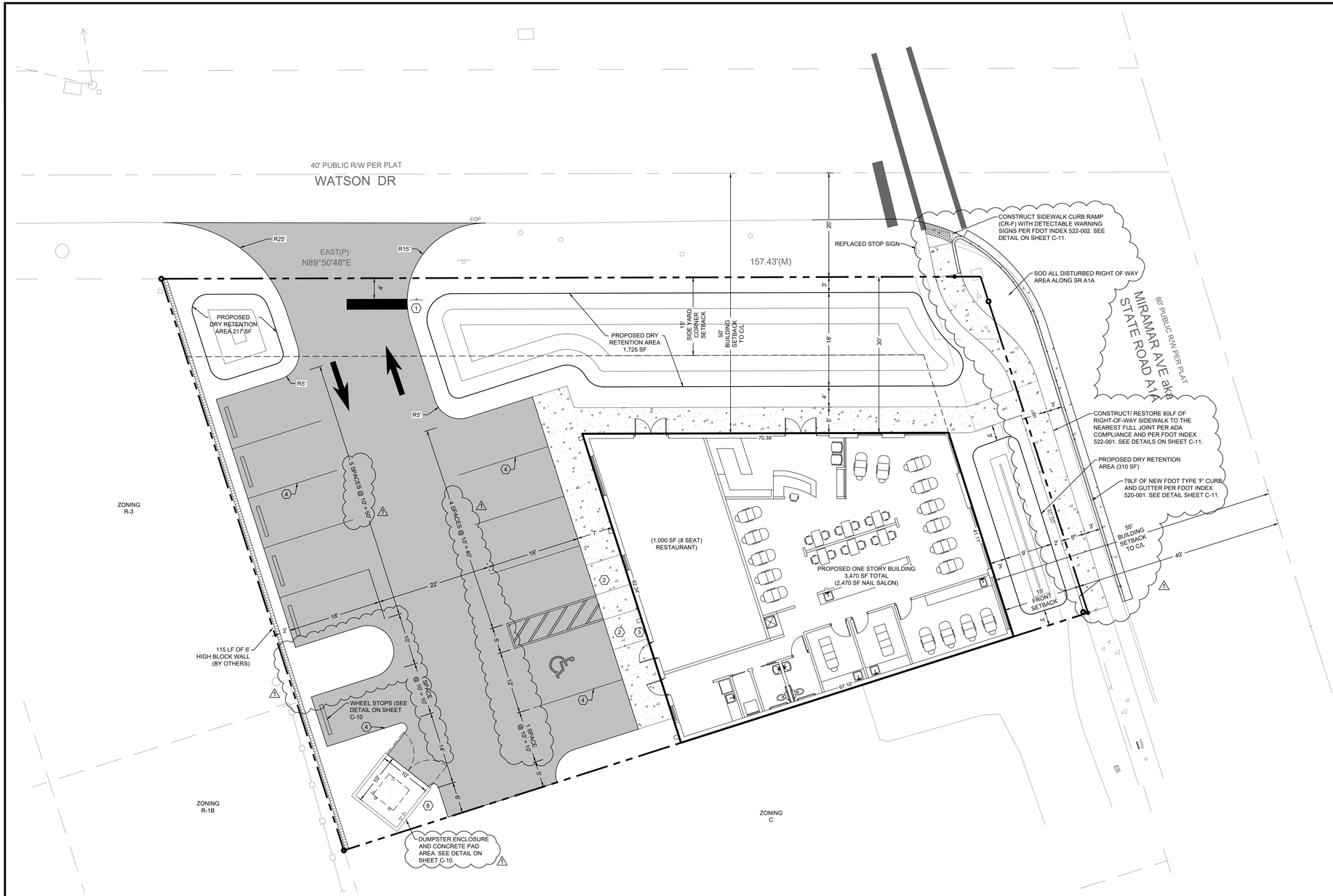

SIGNAGE, STRIPING AND RAMPS LEGEND

1	(R1-1) 36" STOP SIGN AND 24" THERMOPLASTIC SOLID WHITE STOP BAR
2	HANDICAP RAMP - PER FDOT INDEX 711-001
3	WALL MOUNTED HANDICAP PARKING SIGN (SEE DETAIL SHEET C-9)
4	4" SOLID WHITE PARKING STRIPE (TYP)
6	6' HIGH DUMPSTER ENCLOSURE (SEE DETAIL ON SHEET C-10)

SITE INFORMATION

GENERAL STATEMENT
THIS PROPOSED PROJECT INVOLVES CONSTRUCTION OF A 3,470 SF ONE STORY BUILDING, CONSISTING OF 1,000 SF OF RESTAURANT AND 2,470 SF COMMERCIAL ALONG WITH SITE IMPROVEMENTS WITHIN 0.32 ACRES.

OWNER
PAUL & JOHN BECKWITH TRUSTEE
2 HOLLY CIRCLE
INDIALANTIC, FL 32903

ENGINEER
MBV ENGINEERING, INC.
1250 W.EAU GALLIE BLVD, UNIT H
MELBOURNE, FL 32935 PHONE:
(321) 253-1510

APPLICANT
HUNG NGUYEN
TIFFANY'S SPA AND NAIL, INC.
2642 SHELLWOOD DRIVE
MELBOURNE, FL 32934

SURVEYOR
BRIEL & ASSOCIATES
LAND SURVEYING, INC.
1790 HIGHWAY A1A - SUITE 208
SATELLITE BEACH, FL 32937
(321) 773-7775

SITE ADDRESS
NOT ASSIGNED
INDIALANTIC, FL 32903

ZONING
C - COMMERCIAL

TAX PARCEL I.D. NUMBER(S)
27-38-31-EO-62-12

TAX ACCOUNT NO.
2731498

ZONING NOTES
CLASSIFICATION: "C" COMMERCIAL

	REQUIRED	PROVIDED
SIZE: MINIMUM LOT AREA	= 5,000 SQ FT	= 13,892 SQ FT
MINIMUM SETBACKS:		
FRONT BUILDING A1A TO C/L	= 52 FEET	= 55 FEET
FRONT BUILDING	= 15 FEET	= 15 FEET
SIDE BUILDING WATSON DR TO C/L	= 50 FEET	= 50 FEET
SIDE INTERIOR	= 0 FEET	= 0 FEET
SIDE YARD CORNER	= 15 FEET	= 15 FEET
REAR BUILDING	= 25 FEET	= 68 FEET
MAXIMUM BUILDING HEIGHT:	= 35 FEET	= 20.833 FEET

PARKING REQUIREMENTS
REQUIRED: RESTAURANT: 1 SPACE PER 3 SEATS (8 SEATS/ 3 SEATS = 3 SPACES)
COMMERCIAL: 2 SPACES FOR THE FIRST 400 SF + 1 PER 400 SF (2,470 SF = 8 SPACES)

TOTAL REQUIRED: 11 SPACES

PROVIDED: 12 SPACES (11 REGULAR SPACES + 1 H/C SPACE)

PERMITS NEEDED
TOWN OF INDIALANTIC
SJRWMD 10-2
CITY OF MELBOURNE WATER
BREVARD COUNTY SEWER
FDOT DRIVEWAY EXEMPTION
FDOT DRAINAGE EXEMPTION
FDOT UTILITY PERMIT

FLOOD ZONE
THE SUBJECT PROPERTY IS LOCATED IN FLOOD ZONE 'X' PER F.I.R.M. PANEL No. 12009C 0602 G, DATED MARCH 17, 2014.

SANITARY SEWER SOURCE
BREVARD COUNTY SANITARY SEWER SYSTEM

POTABLE WATER SOURCE
CITY OF MELBOURNE WATER SYSTEM

CONSTRUCTION SCHEDULE
MAY 2021
DECEMBER 2021

TRAFFIC STATEMENT
PER ITE TRIP GENERATION MANUAL, 10TH EDITION

HAIR SALON (918) (CLOSEST LAND USE FOR NAIL SALON)

WEEKDAY
PEAK AM = 1.21 TRIPS/1,000 SF x 2,470 SF = 3 TRIPS
PEAK PM = 1.45 TRIPS/1,000 SF x 2,470 SF = 4 TRIPS

RESTAURANT W/O DRIVE THRU (933)

WEEKDAY
PEAK AM = 25.10 TRIPS/1,000 SF X 1,000 SF = 25 TRIPS
PEAK PM = 28.34 TRIPS/1,000 SF X 1,000 SF = 28 TRIPS

* NOTE: BASED ON THE BUILDING LOCATION PEDESTRIAN/BICYCLE TRAFFIC IS EXPECTED

PROJECT INFORMATION

TOTAL SITE AREA	13,744.94 SF	(0.316 AC)	100.00%
EXISTING			
EXISTING CONCRETE	88.80 SF	(0.002 AC)	0.65%
EXISTING ASPHALT	2,932.73 SF	(0.067 AC)	21.34%
EXISTING IMPERVIOUS	3,021.54 SF	(0.069 AC)	21.98%
EXISTING PERVIOUS	10,723.40 SF	(0.246 AC)	78.02%
TO BE REMOVED			
ALL ONSITE ASPHALT AND CONCRETE TO BE REMOVED			
PROPOSED			
PROPOSED BUILDING AREA	3,470.00 SF	(0.080 AC)	36.32%
PROPOSED CONCRETE	1,063.13 SF	(0.024 AC)	7.73%
PROPOSED ASPHALT	4,992.66 SF	(0.111 AC)	25.25%
TOTAL NEW IMPERVIOUS AREA	9,525.80 SF	(0.215 AC)	68.04%
TOTAL PERVIOUS AREA	4,219.14 SF	(0.101 AC)	31.96%

CONCRETE SIDEWALK

ASPHALT PAVEMENT

72 HOURS BEFORE DIGGING CALL TOLL FREE 811 Know what's below. Call before you dig.

GRAPHIC SCALE
10 0 5 10
(IN FEET)
1 inch = 10 ft.

8		
7		
6		
5		
4		
3		
2	INDIALANTIC, FDOT, COUNTY COMMENTS	02-16-2021
1	COMMENTS	xx-xx-xxxx
△	REVISIONS	DATE

JOB NO.	20-1060
DESIGNED	TAC
DRAWN	AFR
DATE	10-22-2020
CHECKED	BAM
DATE ISSUED	3/16/2021

MBV ENGINEERING, INC.
MOIA BOWLES VILLANIZAR & ASSOCIATES
CIVIL • STRUCTURAL • SURVEYING • ENVIRONMENTAL
1250 W. EAU GALLIE BLVD, SUITE H MELBOURNE, FLORIDA 32935
P: 321-253-1510 F: 321-253-0911 CA#3726
VERO: 772-569-0035 FT PIERCE: 772-468-9055 PALM CITY: 772-426-9969

SITE PLAN

TIFFANY'S BEACHSIDE

TOWN OF INDIALANTIC FLORIDA

BRUCE A. MOIA LICENSE No. 47529 STATE OF FLORIDA PROFESSIONAL ENGINEER

BRUCE A. MOIA
FL. P.E. #47529
DATE: 3/16/2021

SHEET
C-05

20-1060

PRELIMINARY SET

W:\2020-1060 BEACHSIDE TIFFANYS\CAD\Site\20-1060 EXIT-DEMO-SITE.dwg 3/16/2021 2:59 PM TAN/AY

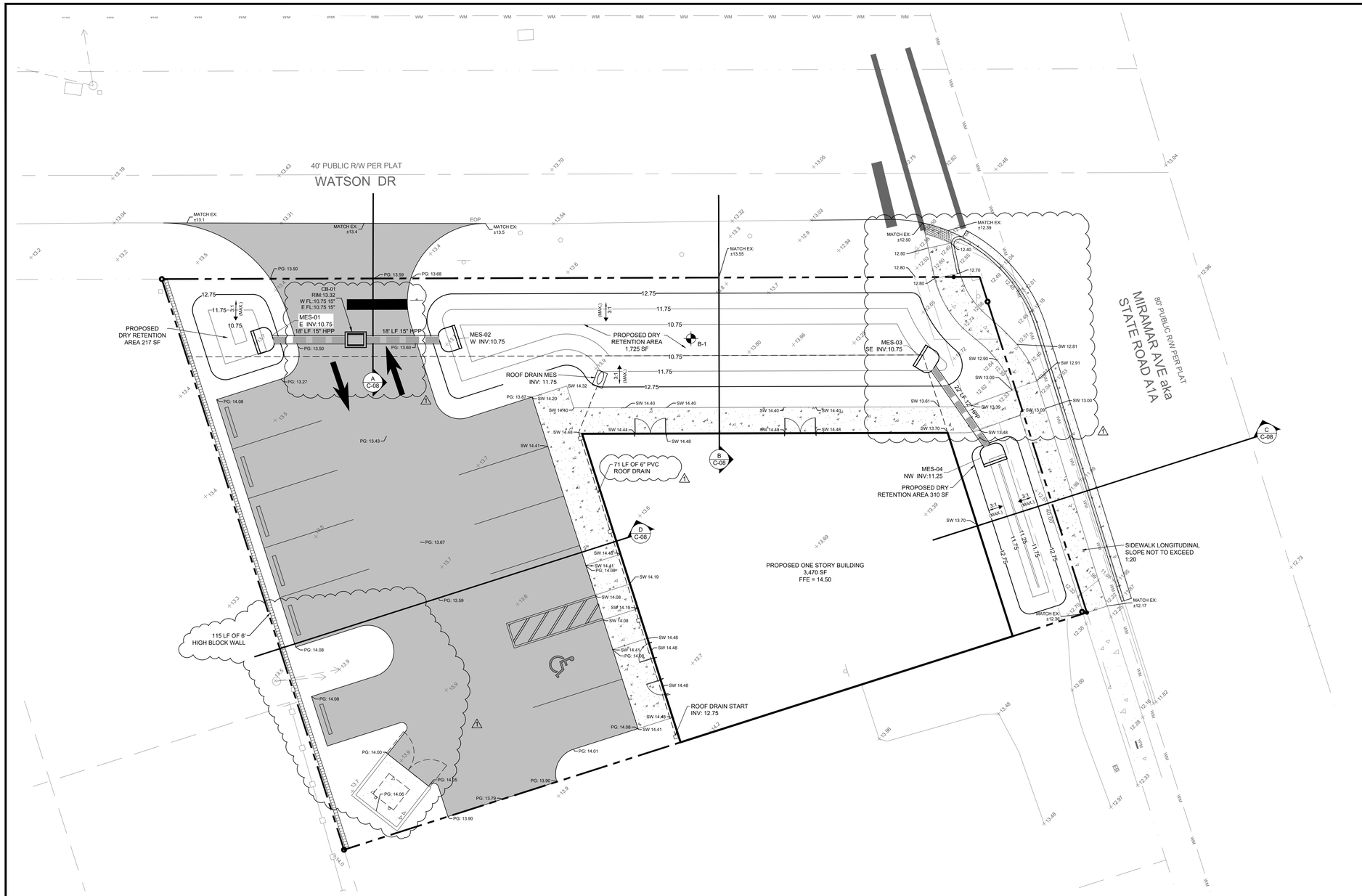

STREETS & STORMWATER NOTES:

1. ALL DRAINAGE SYSTEMS ON-SITE SHALL BE PRIVATELY MAINTAINED.
2. ALL STREETS & STORMWATER CONSTRUCTION SHALL BE IN ACCORDANCE WITH MERRITT ISLAND TECHNICAL SPECIFICATIONS FOR CONSTRUCTION OF STREETS, PAVING AND DRAINAGE SYSTEMS. ALL RIGHT OF WAY CONSTRUCTION ON SR3 (N. COURTNEY PARKWAY) SHALL BE IN ACCORDANCE TO THE LATEST EDITIONS OF THE FDOT DESIGN STANDARDS.
3. ALL ASPHALT CUTS ARE TO BE STRAIGHT CUTS "NO JIG SAW PUZZLE CUT".
4. ALL SIDEWALK AND CURBS ARE TO BE STRAIGHT CUTS.
5. ALL ROW STREETS & STORMWATER CONSTRUCTION SHALL BE IN ACCORDANCE WITH BREVARD COUNTY STANDARDS & TO THE LATEST EDITIONS OF THE FDOT DESIGN STANDARDS.
6. ALL SIDEWALKS WITHIN ROW, PUBLIC OR PRIVATE, SHALL CONFORM TO BCLD EXHIBITS 13, 14 AND 15 & TO THE LATEST EDITIONS OF THE FDOT DESIGN STANDARDS.
7. MOT AND LANE CLOSURES TO COMPLY WITH BREVARD COUNTY PUBLIC WORKS ENGINEERING STANDARD DEVELOPMENT NOTES & TO THE LATEST EDITIONS OF THE FDOT DESIGN STANDARDS.
8. ALL POSTS AND HARDWARE FOR ANY SIGNS INSTALLED ON THE SITE OR IN B.C. R/W WILL ADHERE TO THE REQUIREMENTS SPELLED OUT IN EXHIBIT 26.

DRAINAGE NOTES

1. ALL PIPE JOINTS SHALL BE WRAPPED WITH TYPAR WRAP AROUND EACH JOINT WITH A MINIMUM OVERLAP OF 12". SEE DETAIL SHEET C-11, PER FDOT INDEX #280.
2. PIPE LENGTHS SHOWN ARE CENTER TO CENTER OF STRUCTURES AND INCLUDE MITERED PIPE LENGTHS.
3. SILT FENCES WILL BE INSTALLED PRIOR TO CONSTRUCTION. SEE DRAWING C-04 FOR EROSION AND SEDIMENTATION CONTROL AND SILT FENCE LOCATION.
4. SEE DRAWING C-10 FOR TYPICAL PAVEMENT AND SIDEWALK SECTIONS.
5. ALL DISTURBED AREAS IN THE RIGHT-OF-WAY SHALL BE RESTORED TO A CONDITION EQUAL OR BETTER THAN EXISTING.
6. ROOF DRAINS WILL TIE INTO STORMWATER SYSTEM.

FDOT GENERAL NOTES:

1. ALL CONSTRUCTION IN THE FDOT RIGHT-OF-WAY SHALL CONFIRM TO THE LATEST EDITIONS OF THE FDOT DESIGN STANDARDS [INDEXES], THE FDOT STANDARD SPECIFICATIONS FOR ROAD AND BRIDGE CONSTRUCTION, AND THE FDOT UTILITY ACCOMMODATION MANUAL.
2. ALL STRIPING IN THE FDOT RIGHT-OF-WAY SHALL BE THERMOPLASTIC PER THE LATEST EDITIONS OF THE FDOT DESIGN STANDARDS [INDEXES], THE FDOT STANDARD SPECIFICATIONS FOR ROAD AND BRIDGE CONSTRUCTION.
3. ALL RAISED PAVEMENT MARKERS (RPM) INSTALLED WITHIN THE FDOT RIGHT-OF-WAY AND PROPOSED DRIVEWAY CONNECTION SHALL BE IN ACCORDANCE WITH THE LATEST EDITIONS OF THE FDOT DESIGN STANDARDS [INDEXES] AND THE FDOT STANDARD SPECIFICATIONS FOR ROAD AND BRIDGE CONSTRUCTION.
4. ALL EXCAVATIONS WITHIN TEN (10) FEET OF THE TRAVEL LANES AND GREATER THAN THREE (3) INCHES DEEP MUST BE FILLED IN OR HAVE A SHOULDER TREATMENT PLACED AT THE DROP-OFF PER THE LATEST EDITIONS OF THE FDOT DESIGN STANDARDS [INDEXES] AT THE END OF THE WORK DAY.
5. ALL DISTURBED UNPAVED AREA WITHIN FDOT RIGHT OF WAY SHALL BE SODDED.
6. ALL CONCRETE JOINT CONNECTIONS BETWEEN OLD AND NEW CONCRETE SHALL HAVE A ¼" EXPANSION JOINT AND PERFORMED JOINT FILTER PER THE LATEST EDITIONS OF THE FDOT DESIGN STANDARDS [INDEXES].
7. ALL AFFECTED SIDEWALKS, RAMPS AND CROSSWALKS, WILL BE BUILT AND INSPECTED TO MEET ADA REQUIREMENTS.
8. NOTIFY FDOT 48 HRS. IN ADVANCE OF STARTING PROPOSED WORK BY 'WORK INITIATED' TAB IN ONE STOP PERMITTING.
9. PRIOR TO THE UTILITY WORK CONTRACTOR TO PROVIDE NOT MORE THAN SIX (6) PHOTOGRAPHS DOCUMENTING WORK AREA CONDITIONS.

LEGEND

	FDOT TYPE 'C' D.B.I.
	PROPOSED DRAINAGE PIPE
	MITERED END SECTION (MES)
EP:0.00	PROPOSED EDGE OF PAVEMENT ELEVATIONS
SW:0.00	PROPOSED SIDEWALK ELEVATIONS
PG:0.00	PROPOSED GROUND ELEVATIONS
FL:0.00	PROPOSED FLOW LINE ELEVATIONS
BC:0.00	PROPOSED BACK OF CURB ELEVATIONS
+25.00	EXISTING ELEVATIONS
	PROPOSED SOIL BORINGS
	BASIN LINE
	EXISTING ASPHALT
	PROPOSED ASPHALT
	PROPOSED CONCRETE

SOIL TEST SUMMARY

TEST	GRADE ELEV.	SHWL	NWL
B-1	13.85	8.10	9.10

TEST	HORIZONTAL FLOW RATE	VERTICAL FLOW RATE
B-1	23.60 FT/DAY	30.20 FT/DAY

REFER TO REPORTS PREPARED BY UNIVERSAL ENGINEERING SCIENCE DATED 9/01/20 AND 12/29/20 FOR ADDITIONAL INFORMATION.

72 HOURS BEFORE DIGGING CALL TOLL FREE 811 Know what's below. Call before you dig.

GRAPHIC SCALE
10 0 5 10
(IN FEET)
1 inch = 10 ft.

DATE	COMMENTS	DATE
1	INDIA/TLANTIC, FDOT, COUNTY COMMENTS	02-16-2021
2		xx-xx-xxxx
3		
4		
5		
6		
7		
8		

△ REVISIONS

JOB NO.	20-1060
DESIGNED	TAC
DRAWN	AFR
DATE	10-22-2020
CHECKED	BAM
DATE ISSUED	3/16/2021

MBV ENGINEERING, INC.
MOIA BOWLES VILLANIZAR & ASSOCIATES
CIVIL • STRUCTURAL • SURVEYING • ENVIRONMENTAL
1250 W. EAU GALLIE BLVD. SUITE H. MELBOURNE, FLORIDA 32935
P: 321-253-1510 F: 321-253-0911 CA#0728
VERO: 772-569-0035 FT PIERCE: 772-466-9905 PALM CITY: 772-426-9969

PAVING, GRADING, AND DRAINAGE PLAN

TIFFANY'S BEACHSIDE

TOWN OF INDIALANTIC FLORIDA

BRUCE A. MOIA LICENSE No. 47529 STATE OF FLORIDA PROFESSIONAL ENGINEER

BRUCE A. MOIA
FL. P.E. #47529
DATE: 3/16/2021

SHEET
C-06

20-1060
PRELIMINARY SET

W:\20020-1060 BEACHSIDE TIFFANY\PC\ACAD\dwgs\20-1060 PD\CIVIL\SECT.dwg 3/16/2021 3:03 PM TANY C

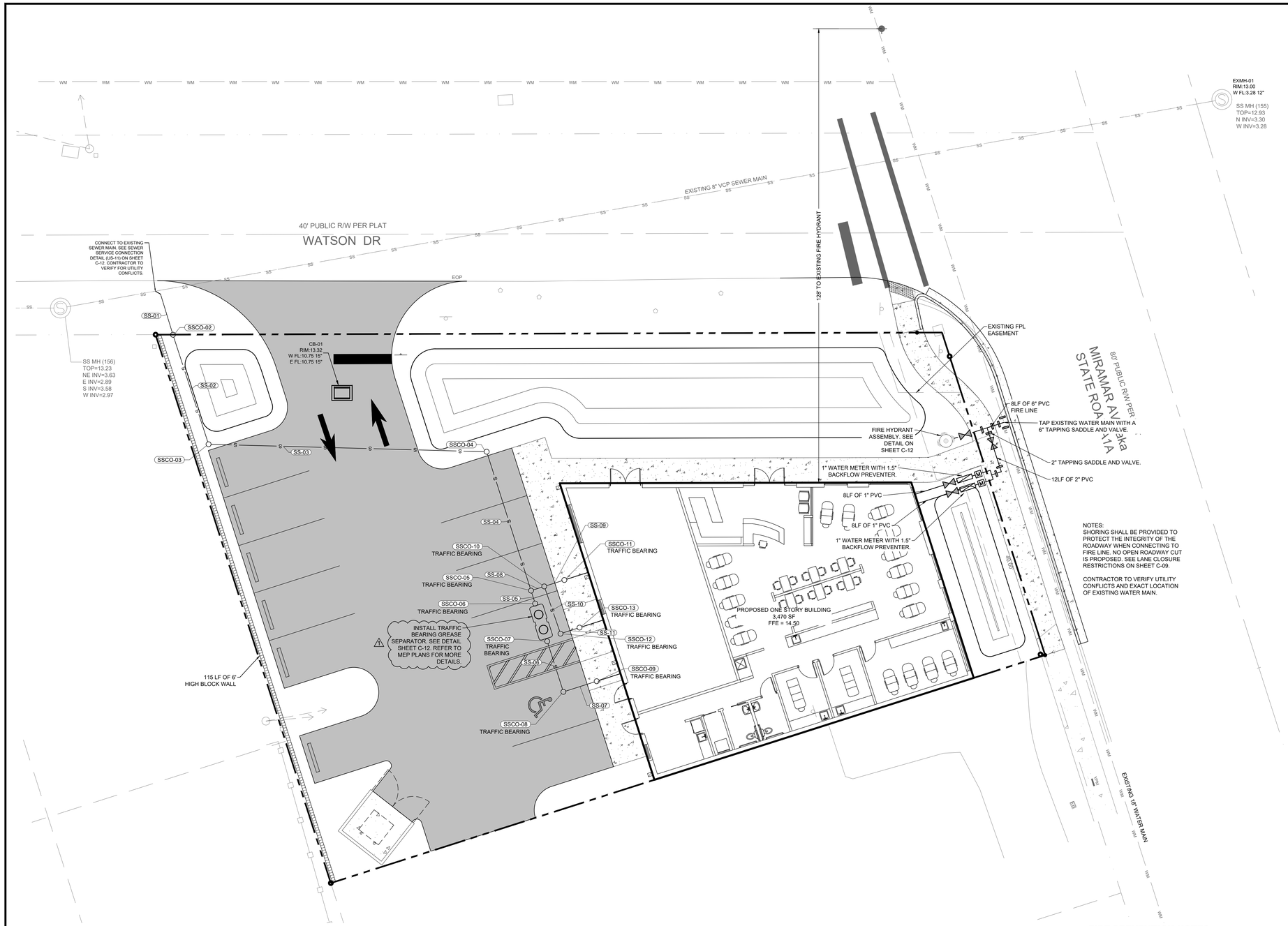

NOTES:
SHORING SHALL BE PROVIDED TO PROTECT THE INTEGRITY OF THE ROADWAY WHEN CONNECTING TO FIRE LINE. NO OPEN ROADWAY CUT IS PROPOSED. SEE LANE CLOSURE RESTRICTIONS ON SHEET C-09.

CONTRACTOR TO VERIFY UTILITY CONFLICTS AND EXACT LOCATION OF EXISTING WATER MAIN.

SANITARY STRUCTURE TABLE

STRUCTURE I.D.	DESCRIPTION	DATA
EXMH-01	MANHOLE	RIM: 13.00 [Pipe - (4)] W 12" INV: 3.28
EXMH-02	MANHOLE	RIM: 13.16 [Pipe - (4) (1)] E 12" INV: 2.89 [Pipe - (3)] W 12" INV: 2.96
SSCO-02	CLEANOUT	RIM: 13.38 [SS-02] S 6" INV: 9.43 [SS-01] N 6" INV: 9.43
SSCO-03	CLEANOUT	RIM: 10.51 [SS-03] E 6" INV: 9.66 [SS-02] N 6" INV: 9.66
SSCO-04	CLEANOUT	RIM: 13.57 [SS-04] S 6" INV: 10.22 [SS-03] W 6" INV: 10.22
SSCO-05	CLEANOUT	RIM: 13.99 [SS-05] S 4" INV: 10.51 [SS-08] E 4" INV: 10.51 [SS-04] N 6" INV: 10.51
SSCO-06	CLEANOUT	RIM: 14.00 [SS-05] N 4" INV: 10.53
SSCO-07	CLEANOUT	RIM: 13.95 [SS-06] S 4" INV: 10.53
SSCO-08	CLEANOUT	RIM: 14.00 [SS-07] E 4" INV: 10.64 [SS-06] N 4" INV: 10.64
SSCO-09	CLEANOUT	RIM: 14.36 [SS-07] W 4" INV: 10.71
SSCO-10	CLEANOUT	RIM: 14.03 [SS-10] S 4" INV: 10.54 [SS-09] E 4" INV: 10.54 [SS-08] W 4" INV: 10.53
SSCO-11	CLEANOUT	RIM: 14.43 [SS-09] W 4" INV: 10.58
SSCO-12	CLEANOUT	RIM: 14.00 [SS-11] E 4" INV: 10.64 [SS-10] N 4" INV: 10.64
SSCO-13	CLEANOUT	RIM: 14.20 [SS-11] W 4" INV: 10.68

PIPE TABLE

PIPE NAME	SIZE	LENGTH	SLOPE	MATERIAL
SS-01	6 "	9'	1.00%	PVC Pipe
SS-02	6 "	23'	1.00%	PVC Pipe
SS-03	6 "	56'	1.00%	SDR 35 PVC
SS-04	6 "	29'	1.00%	SDR 35 PVC
SS-05	4 "	3'	1.00%	SDR 35 PVC
SS-06	4 "	11'	1.00%	SDR 35 PVC
SS-07	4 "	7'	1.00%	SDR 35 PVC
SS-08	4 "	3'	1.00%	SDR 35 PVC
SS-09	4 "	4'	1.00%	SDR 35 PVC
SS-10	4 "	10'	1.00%	SDR 35 PVC
SS-11	4 "	4'	1.00%	SDR 35 PVC

GENERAL NOTES

1. THE CONTRACTOR SHALL BE RESPONSIBLE FOR LOCATING EXISTING WATER MAINS, FORCE MAINS, REUSE MAINS, SANITARY SEWER, STORM MAINS AND OTHER UTILITIES AND MAINTAIN MINIMUM CLEARANCE BETWEEN WATER MAINS AND OTHER UTILITIES AT ALL POINTS ALONG THEIR LENGTH AS REQUIRED IN THE PLANS, DETAILS AND SPECIFICATIONS.
2. ALL NECESSARY INSPECTIONS AND/OR CERTIFICATIONS REQUIRED BY CODE AND/OR UTILITY SERVICE PROVIDER COMPANIES SHALL BE PERFORMED PRIOR TO ANNOUNCED BUILDING PROCESSION AND THE FINAL CONNECTION OF SERVICES.
3. CONTRACTOR SHALL REFER TO ARCHITECTURAL PLANS FOR PRECISE BUILDING DIMENSIONS, BUILDING UTILITY ENTRANCE LOCATIONS AND EXIT PORCH LOCATIONS.
4. REFER TO WATER AND SEWER SEPARATION NOTES ON THIS SHEET FOR PROTECTION OF POTABLE WATER.
5. THE GENERAL CONTRACTOR MUST SUBMIT THE AS-BUILT DRAWINGS, PREPARED BY A SURVEYOR LICENSED TO PRACTICE IN THE STATE OF FLORIDA, TO THE CITY OF MELBOURNE AND BREVARD COUNTY UTILITIES DEPARTMENT FOR APPROVAL PRIOR TO FINAL ACCEPTANCE AND ISSUANCE OF CERTIFICATION OF OCCUPANCY.
6. NO UTILITY LATERALS, METER BOXES, VALVES, ETC. SHALL BE LOCATED IN PROPOSED SIDEWALK AREAS.
7. SITE CONTRACTOR SHALL BE RESPONSIBLE FOR CONSTRUCTING WATER AND SEWER SERVICES WITHIN 5 FEET OF BUILDING UNLESS OTHERWISE NOTED.
8. CONTRACTOR SHALL ADJUST INLET/STRUCTURE OR CONNECTION LOCATION AS REQUIRED TO ENSURE PROPOSED STRUCTURES AND PIPES ARE IN PROPER ALIGNMENT AND MATCH SLOPE OF EXISTING PIPES OR CONNECTIONS.
9. ALL WATER LINE CONSTRUCTION SHALL CONFORM WITH THE CITY OF MELBOURNE UTILITIES DEPARTMENT POLICIES, PROCEEDINGS, AND STANDARDS.
10. THE CONTRACTOR IS SPECIFICALLY CAUTIONED THAT THE LOCATION AND/OR ELEVATION OF EXISTING UTILITIES AS SHOWN ON THESE PLANS ARE BASED ON RECORDS OF THE VARIOUS UTILITY COMPANIES, AND WHERE POSSIBLE, MEASUREMENTS TAKEN IN THE FIELD. THE INFORMATION IS NOT TO BE RELIED ON AS BEING EXACT OR COMPLETE. THE CONTRACTOR MUST CALL THE APPROPRIATE UTILITY COMPANIES AT LEAST 72 HOURS BEFORE ANY EXCAVATION TO REQUEST EXACT FIELD LOCATION OF UTILITIES. IT SHALL BE THE RESPONSIBILITY OF THE CONTRACTOR TO RELOCATE ALL EXISTING UTILITIES WHICH CONFLICT WITH THE PROPOSED IMPROVEMENTS SHOWN ON THE PLANS.
11. ALL SEWER CONSTRUCTION SHALL CONFORM TO THE CRITERIA FOR WATER AND SANITARY SEWERAGE SYSTEMS WITHIN BREVARD COUNTY, LATEST EDITION.

FIRE FLOW CALCULATIONS (NFPA)

BUILDING DESCRIPTION	FLOOR AREA (Sq. Ft.)	FIRE FLOW (TABLE 18.4.5.1.2)	EXPOSURE %	INITIAL FIRE FLOW SUBTOTAL (GPM)	FIRE SPRINKLER DECREASE (75%)	TOTAL MINIMUM FLOW (GPM)	HYDRANTS REQUIRED	NOTES
NAIL SALON & RESTAURANT	3,470	1,500	---	1,500	---	1,500	2	*

* INCLUDES ONE PROPOSED FIRE HYDRANT ON-SITE AND ONE EXISTING FIRE HYDRANT WITHIN 500' OF THE FURTHER BUILDING CORNER.

CONSTRUCTION TYPE: TYPE II-B

HAZARD CLASSIFICATION: ORDINARY (2 HOUR DURATION)

STRUCTURE OCCUPANCY: NAIL SALON/RESTAURANT BUILDING IN ACCORDANCE WITH NFPA 1, SECTION 3.3.183 OCCUPANCY (2015 EDITION)

FIRE PREVENTION NOTES

1. FIRE DEPARTMENT ACCESS ROADS SHALL HAVE AN UNOBSTRUCTED VERTICAL CLEARANCE OF NOT LESS THAN 13 FT 6 IN. (4.1 M). (FFPC 1-18-2.3.4.1.2)
2. FIRE DEPARTMENT ACCESS ROADS SHALL BE PROVIDED SUCH THAT ANY PORTION OF THE FACILITY OR ANY PORTION OF AN EXTERIOR WALL OF THE FIRST STORY OF THE BUILDING IS LOCATED NOT MORE THAN 150 FT (46 M) FROM FIRE DEPARTMENT ACCESS ROADS AS MEASURED BY AN APPROVED ROUTE AROUND THE EXTERIOR OF THE BUILDING OR FACILITY. (FFPC 1-18.2.3.2.2)

UTILITY NOTES

1. ALL UTILITIES ON-SITE TO PROPOSED BUILDING ARE NEW WITH PROPOSED UTILITY CONNECTIONS.
2. CONTRACTOR TO FIELD VERIFY EXISTING UTILITIES AND PROTECT THEM DURING CONSTRUCTION.
3. GREASE INTERCEPTOR IS SHOWN FOR REFERENCE ONLY. GREASE INTERCEPTOR SIZING CALCULATIONS AND SHOP DRAWINGS ARE TO BE SUBMITTED AS PART OF THE BUILDING PERMIT APPLICATION.

72 HOURS BEFORE DIGGING CALL TOLL FREE 811 Know what's below. Call before you dig.

GRAPHIC SCALE
10 0 5 10
(IN FEET)
1 inch = 10 ft.

REVISIONS		
1	INDIA/LANTIC, FDOT, COUNTY COMMENTS	02-16-2021
2		xx-xx-xxxx
3		
4		
5		
6		
7		
8		

JOB NO.	20-1060
DESIGNED	TAC
DRAWN	AFR
DATE	10-22-2020
CHECKED	BAM
DATE ISSUED	3/16/2021

MBV ENGINEERING, INC.
MOIA BOWLES VILLANIZAR & ASSOCIATES
CIVIL • STRUCTURAL • SURVEYING • ENVIRONMENTAL
CA#3728
1250 W. EAU GALLIE BLVD. SUITE E
MELBOURNE, FLORIDA 32935
P: 321-253-1510 F: 321-253-0911
E-MAIL: INFO@MBVEGROUP.COM
VERO: 772-569-0035 FT PIERCE: 772-468-9055 PALM CITY: 772-426-9969

UTILITY PLAN

TIFFANY'S BEACHSIDE

TOWN OF INDIALANTIC FLORIDA

BRUCE A. MOIA
LICENSE
No. 47529
STATE OF FLORIDA
PROFESSIONAL ENGINEER

BRUCE A. MOIA
FL. P.E. #47529
DATE 3/16/2021

SHEET
C-07

20-1060
PRELIMINARY SET

W:\2020-1060 BEACHSIDE TIFFANYS\CADD\acad-1060 PDO-UTIL-SECT.dwg 3/16/2021 3:02 PM TAN\Y C

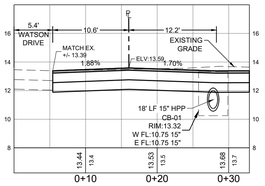

SECTION A
H: 1"=10'
V: 1"=5'

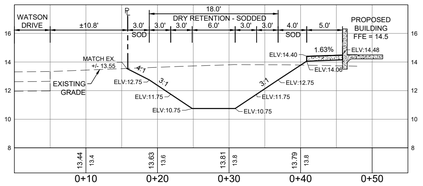

SECTION B
H: 1"=10'
V: 1"=5'

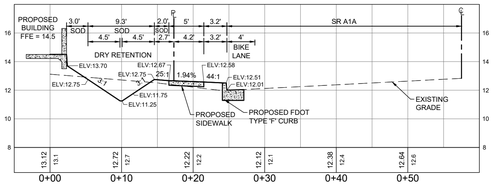

SECTION C
H: 1"=10'
V: 1"=5'

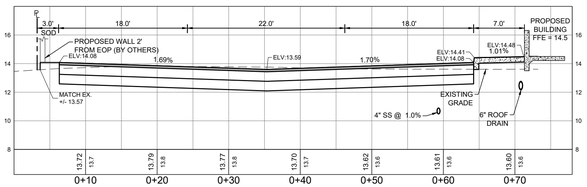

SECTION D
H: 1"=10'
V: 1"=5'

1

8		
7		
6		
5		
4		
3		
2		
1	INDIALANTIC, FDOT, COUNTY COMMENTS	02-16-2021
	COMMENTS	xx-xx-xxxx
△	**REVISIONS**	**DATE**

JOB NO.	20-1060
DESIGNED	TAC
DRAWN	AFR
DATE	10-22-2020
CHECKED	BAM
DATE ISSUED	3/16/2021

MBV ENGINEERING, INC.
MOIA BOWLES VILLANIZAR & ASSOCIATES
CIVIL • STRUCTURAL • SURVEYING • ENVIRONMENTAL
CAN0726
2250 W. EAU GALLIE BLVD. SUITE H
MELBOURNE, FLORIDA 32935
P: 321-253-1510 F: 321-253-0911
AA-0003110 LB-0003-S
VERO: 772-569-0035 FT PIERCE: 772-468-9055 PALM CITY: 772-426-9969

SECTIONS

TIFFANY'S BEACHSIDE

TOWN OF INDIALANTIC FLORIDA

BRUCE A. MOIA
LICENSE
No. 47529
STATE OF FLORIDA
PROFESSIONAL ENGINEER

BRUCE A. MOIA
FL. P.E. #47529

DATE: 3/16/2021

SHEET

C-08

20-1060

PRELIMINARY SET

W:\2020-1060 BEACHSIDE TIFFANY\DCA\Sheets\C-1060 PADCUTL-SECT.dwg 3/16/2021 3:03 PM TAMY C

MOT NOTES:

1. CONTRACTOR SHALL PROVIDE A SIDEWALK DIVERSION FOR PEDESTRIANS PER FDOT INDEX 102-660. SEE SHEET C-15. NO SIDEWALK CLOSURE ALLOWED.
2. CONTRACTOR SHALL BE RESPONSIBLE TO INSTALL AND MAINTAIN ALL MOT DEVICES DURING CONSTRUCTION OF IMPROVEMENTS TO SR 3 AND RIGHT-OF-WAY.
3. LANE CLOSURE RESTRICTIONS ON A1A SB IS 7:00 AM - 7:00 PM.

72 HOURS BEFORE DIGGING
CALL TOLL FREE
811
Know what's below.
Call before you dig.

N

GRAPHIC SCALE
50 0 25 50
(IN FEET)
1 inch = 50 ft.

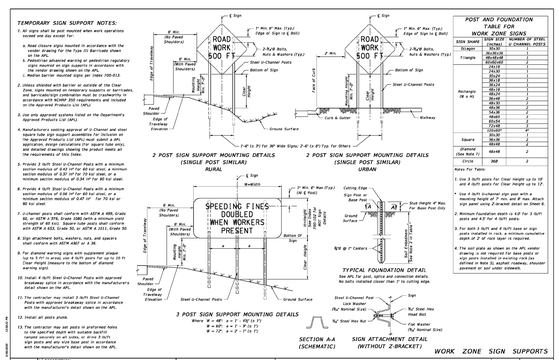

FDOT FY 2020-21 STANDARD PLANS — GENERAL INFORMATION FOR TRAFFIC CONTROL THROUGH WORK ZONES — INDEX 102-600 — SHEET 5 of 12

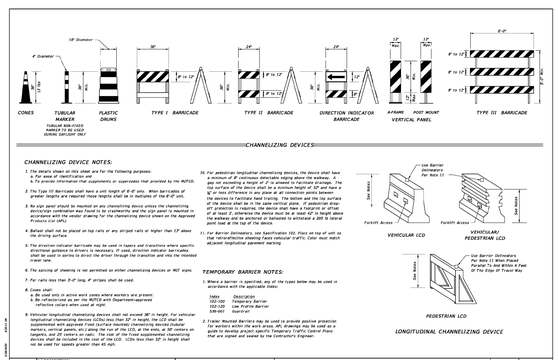

FDOT FY 2020-21 STANDARD PLANS — GENERAL INFORMATION FOR TRAFFIC CONTROL THROUGH WORK ZONES — INDEX 102-600 — SHEET 11 of 12

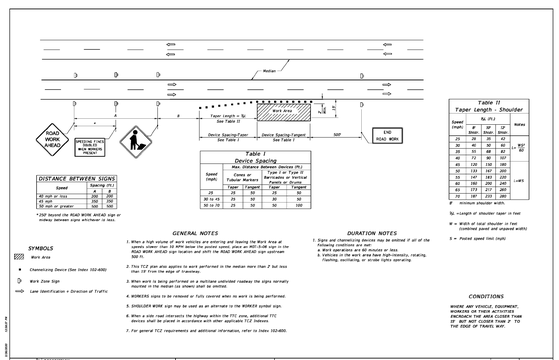

FDOT FY 2020-21 STANDARD PLANS — MULTILANE, WORK ON SHOULDER — INDEX 102-612 — SHEET 1 of 1

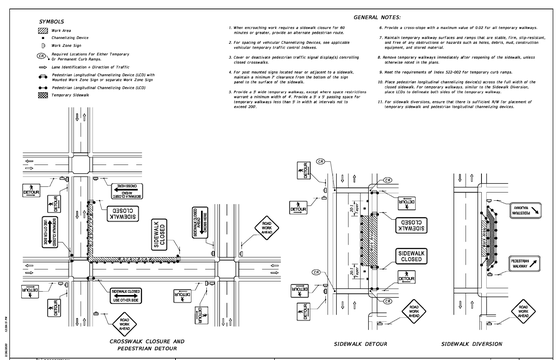

FDOT FY 2020-21 STANDARD PLANS — PEDESTRIAN CONTROL FOR CLOSURE OF SIDEWALKS — INDEX 102-660 — SHEET 1 of 1

JOB NO.	20-1060
DESIGNED	TAC
DRAWN	AFR
DATE	10-22-2020
CHECKED	BAM
DATE ISSUED	3/16/2021

8		
7		
6		
5		
4		
3		
2		
1	INDIATLANTIC, FDOT, COUNTY COMMENTS	02-16-2021
	COMMENTS	XX-XX-XXXX
△	**REVISIONS**	**DATE**

MBV ENGINEERING, INC.
MOJA BOWLES VILLAMIZAR & ASSOCIATES
CIVIL • STRUCTURAL • SURVEYING • ENVIRONMENTAL
1250 W. EAU GALLIE BLVD. SUITE H MELBOURNE, FLORIDA 32935 CA#3726
P: 321-253-1510 F: 321-253-0911
A.A.C.O. #AAC-0001525
VERO: 772-569-0035 FT PIERCE: 772-468-9055 PALM CITY: 772-426-9969

NEIGHBORHOOD CONNECTION PLAN

TIFFANY'S BEACHSIDE

TOWN OF INDIALANTIC FLORIDA

BRUCE A. MOIA
LICENSE No. 47529
STATE OF FLORIDA
PROFESSIONAL ENGINEER

BRUCE A. MOIA DATE: 3/16/2021
FL # P.E. #47529

SHEET
C-09

20-1060

PRELIMINARY SET

W:\20020-1060 BEACHSIDE TIFFANYS\CAD\Bank\20-1060 NEIGHBORLANDS.dwg 3/16/2021 3:33 PM TAONY

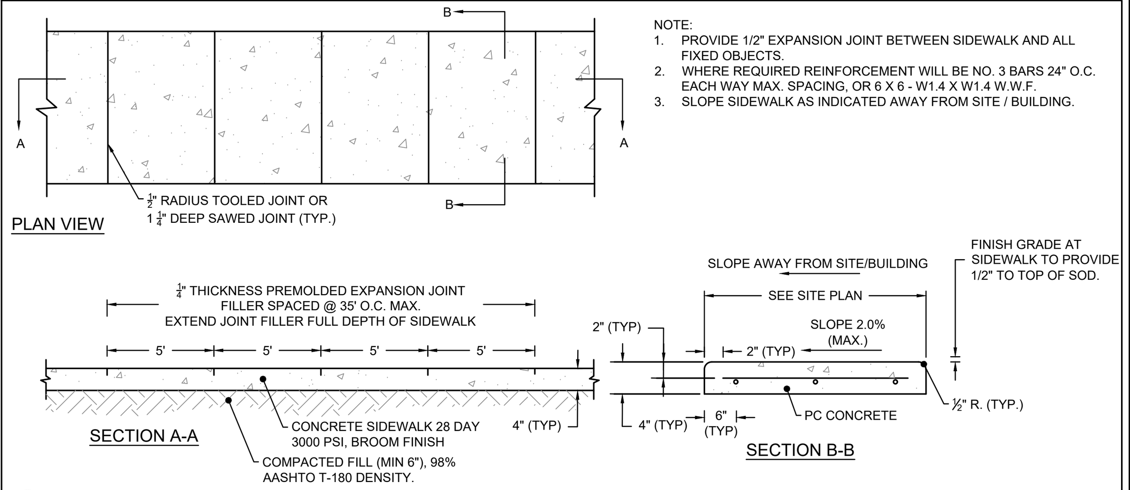

NOTE:
1. PROVIDE 1/2" EXPANSION JOINT BETWEEN SIDEWALK AND ALL FIXED OBJECTS.
2. WHERE REQUIRED REINFORCEMENT WILL BE NO. 3 BARS 24" O.C. EACH WAY MAX. SPACING, OR 6 X 6 - W1.4 X W1.4 W.W.F.
3. SLOPE SIDEWALK AS INDICATED AWAY FROM SITE / BUILDING.

1 **ONSITE CONCRETE SIDEWALK**
N.T.S.

* SEE FDOT FDOT SIDEWALK DETAIL ON THIS SHEET FOR RIGHT-OF-WAY CONSTRUCTION ALONG SR A1A.

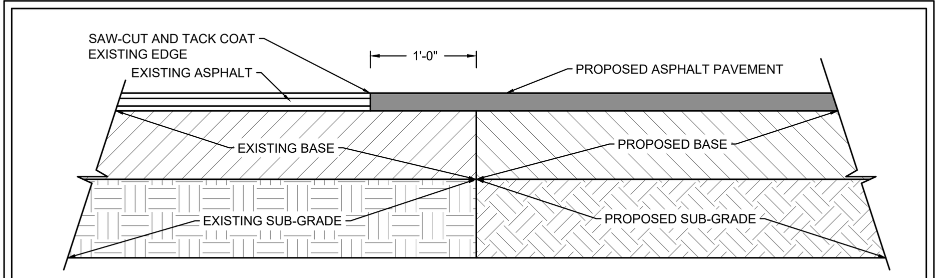

NOTE:
IN LIEU OF STABILIZED SUBGRADE COURSE, THE CONTRACTOR SHALL HAVE THE OPTION OF ADDING ADDITIONAL BASE COURSE THICKNESS. THE PROVIDED THICKNESS FOR THE OPTIONAL BASE COURSE WHEN SUBSTITUTING BASE FOR STABILIZED SUBGRADE SHALL BE AS FOLLOWS:
OPTION BASE COURSE THICKNESS = (0.5 X STABILIZED SUBGRADE COURSE THICKNESS) + ORIGINAL BASE COURSE THICKNESS.

2 **PAVEMENT SAW-CUT AND BUTT JOINT**
N.T.S.

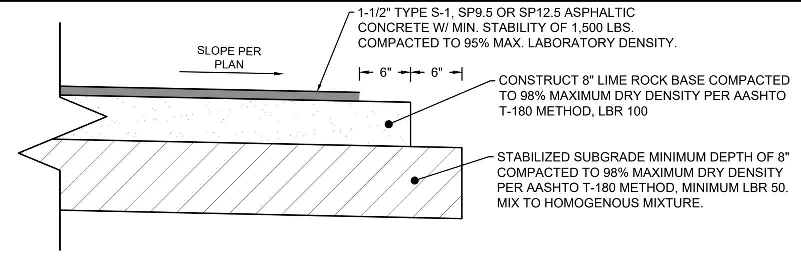

NOTES:
1. IN LIEU OF STABILIZED SUBGRADE COURSE, THE CONTRACTOR SHALL HAVE THE OPTION OF ADDING ADDITIONAL BASE COURSE THICKNESS. THE PROVIDED THICKNESS FOR THE OPTIONAL BASE COURSE WHEN SUBSTITUTING BASE FOR STABILIZED SUBGRADE SHALL BE AS FOLLOWS:
OPTION BASE COURSE THICKNESS = (0.5 X STABILIZED SUBGRADE COURSE THICKNESS) + ORIGINAL BASE COURSE THICKNESS.
2. IN LIEU OF LIMEROCK, CONTRACTOR SHALL HAVE THE OPTION OF USING CRUSHED CONCRETE IN ACCORDANCE WITH FDOT STANDARD SPECIFICATIONS FOR ROAD AND BRIDGE CONSTRUCTION (LATEST EDITION) SECTION 200.

3 **STANDARD DUTY FLEXIBLE PAVEMENT DETAIL**
N.T.S.

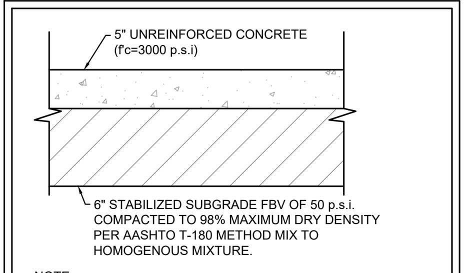

NOTE:
IN LIEU OF STABILIZED SUBGRADE COURSE, THE CONTRACTOR SHALL HAVE THE OPTION OF ADDING ADDITIONAL BASE COURSE THICKNESS. THE PROVIDED THICKNESS FOR THE OPTIONAL BASE COURSE WHEN SUBSTITUTING BASE FOR STABILIZED SUBGRADE SHALL BE AS FOLLOWS:
OPTION BASE COURSE THICKNESS = (0.5 X STABILIZED SUBGRADE COURSE THICKNESS) + ORIGINAL BASE COURSE THICKNESS.

4 **STANDARD CONCRETE DETAIL**
N.T.S.

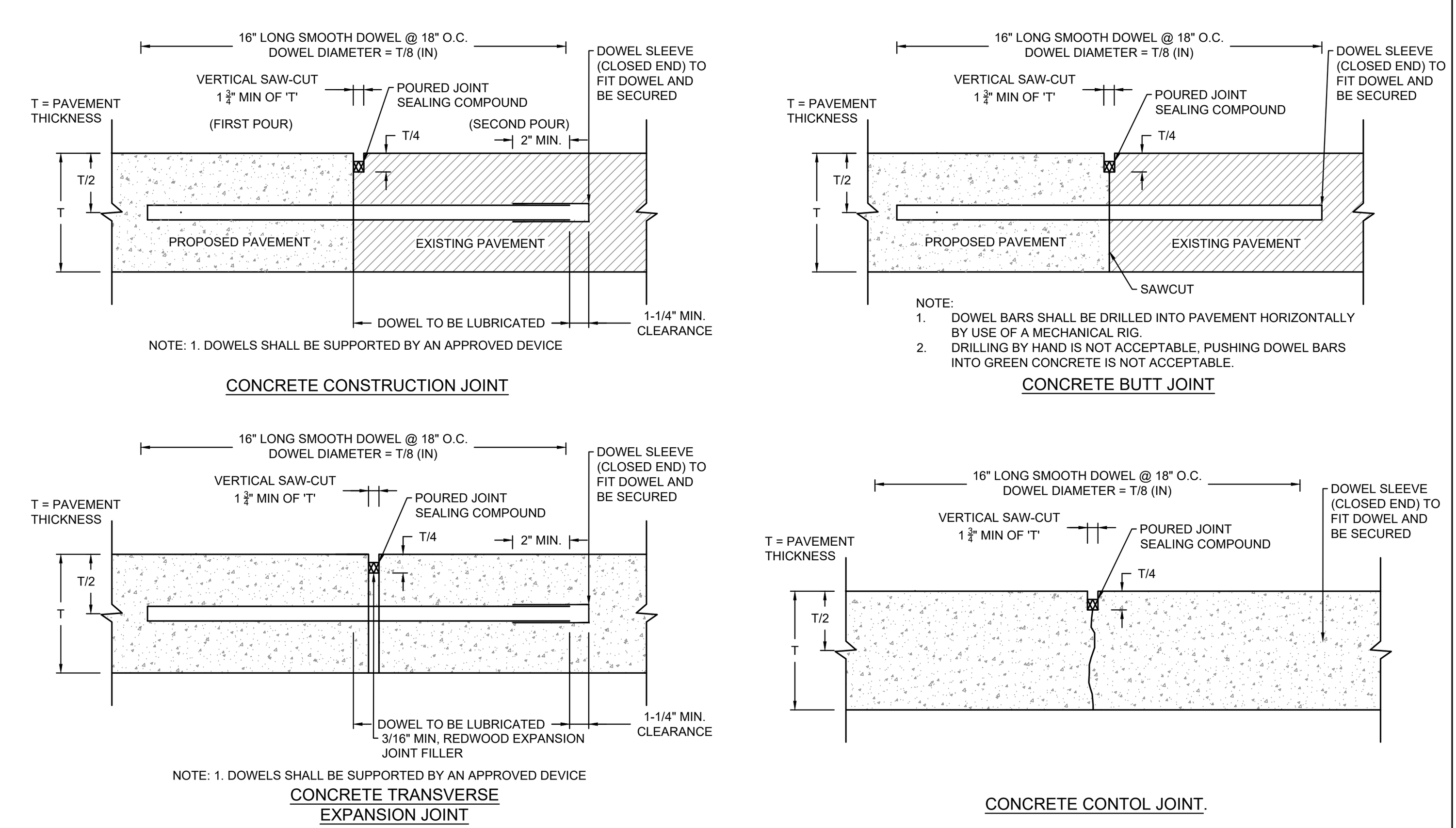

NOTE: 1. DOWELS SHALL BE SUPPORTED BY AN APPROVED DEVICE

CONCRETE CONSTRUCTION JOINT

NOTE:
1. DOWEL BARS SHALL BE DRILLED INTO PAVEMENT HORIZONTALLY BY USE OF A MECHANICAL RIG.
2. DRILLING BY HAND IS NOT ACCEPTABLE, PUSHING DOWEL BARS INTO GREEN CONCRETE IS NOT ACCEPTABLE.

CONCRETE BUTT JOINT

NOTE: 1. DOWELS SHALL BE SUPPORTED BY AN APPROVED DEVICE

CONCRETE TRANSVERSE EXPANSION JOINT

CONCRETE CONTOL JOINT.

5 **CONCRETE JOINT DETAIL**
N.T.S.

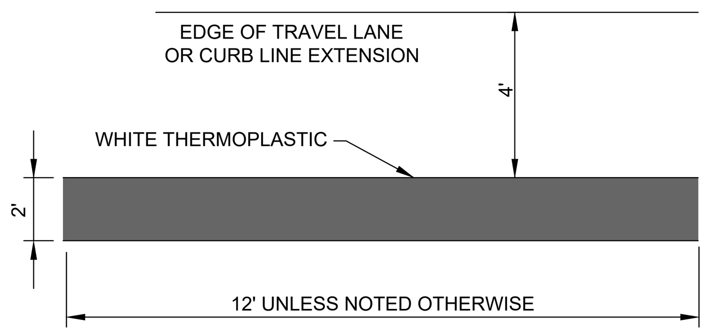

6 **STOP BAR DETAIL**
N.T.S.

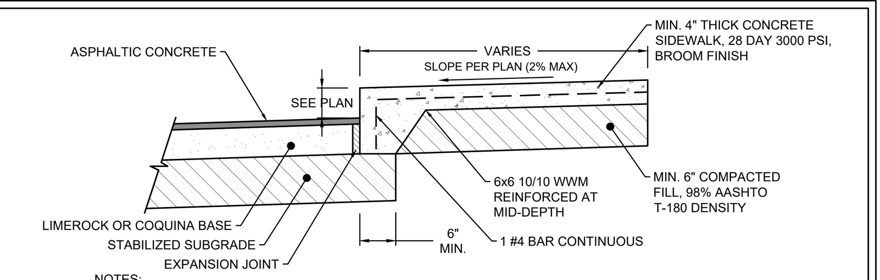

NOTES:
1. CONTRACTOR TO PROVIDE HAND TOOLED TRANSVERSE AND LONGITUDINAL CONTRACTION JOINTS @ 5'-0" O.C. MAX. 3/8" EXPANSION JOINTS @ 25'-0" O.C. MAX.
2. IN LIEU OF WELDED WIRE FABRIC, FIBER MESH CONCRETE MAY BE USED.
3. FINISH EDGE OF SIDEWALK WITH EDGING TOOL HAVING A RADIUS OF 1/2".

7 **CONCRETE SIDEWALK ADJACENT TO PAVEMENT DETAIL**
N.T.S.

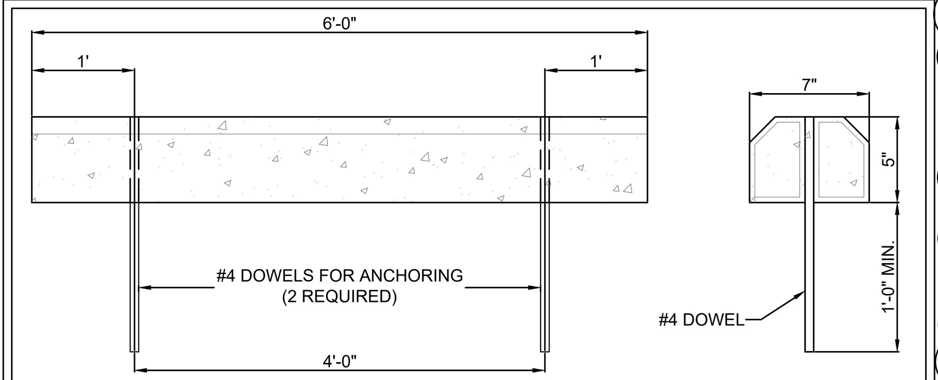

8 **PRE-CAST CONCRETE WHEEL STOP DETAIL**
N.T.S.

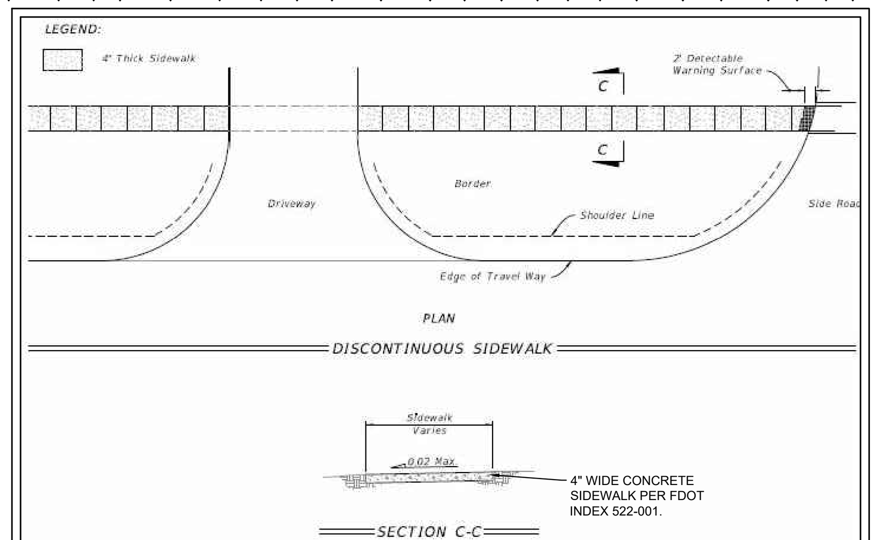

9 FDOT SIDEWALK DETAIL
N.T.S.

△1

STREET NAME SIGN NOTES:

1. SIGNS IN PUBLIC R.O.W. SHALL BE GREEN WITH 5/8" WHITE BORDER AND WHITE LETTERS AND NUMBERS.
2. SIGNS IN PRIVATE R.O.W. SHALL BE WHITE WITH 5/8" BLACK BORDER AND BLACK LETTERS AND NUMBERS.
3. STREET NAME BLADES SHALL BE RIVETED TOGETHER AT EACH CORNER WITH 3/16" SMALL FLANGE AVEX RIVETS. ATTACH BLADES TO POST WITH CHERRY-MATE ALUMINUM RIVETS, # BALM8BP34, OR 5/16" X 2-1/2" S.S. BOLTS, 1-1/4" X 5/16" S.S. FENDER WASHERS, W/ S.S. STOP HEX NUT HAVING NYLON INSERTS (LOCK NUTS).

STREET NAME SIGN LETTERING (MUTCD DESIGNATION D3-1):

CONVENTIONAL STREETS:
6" HIGH INITIAL UPPER CASE LETTERS, LOWER CASE LETTERS AT LEAST 4.5" HIGH. SIGN DIMENSIONS: 12" MIN. HEIGHT; WIDTH VARIES AS NEEDED.

LOCAL STREETS 25 MPH OR LESS:
4" HIGH INITIAL UPPER CASE LETTERS AND 3" HIGH LOWER CASE LETTERS MAY BE USED. SIGN DIMENSIONS: 9" MIN. HEIGHT; WIDTH VARIES AS NEEDED.

MULTI-LANE STREETS GREATER THAN 40 MPH:
8" HIGH INITIAL UPPER CASE LETTERS AND LOWER CASE LETTERS AT LEAST 6" HIGH. SIGN DIMENSIONS: 18" MIN. HEIGHT; WIDTH VARIES AS NEEDED.

"NO OUTLET" SIGN (MUTCD DESIGNATION W14-2A):
4" HIGH ALL-CAPITAL LETTERS, SIZE: 8" X 36" MIN. SEE MUTCD SECTION 2C.26

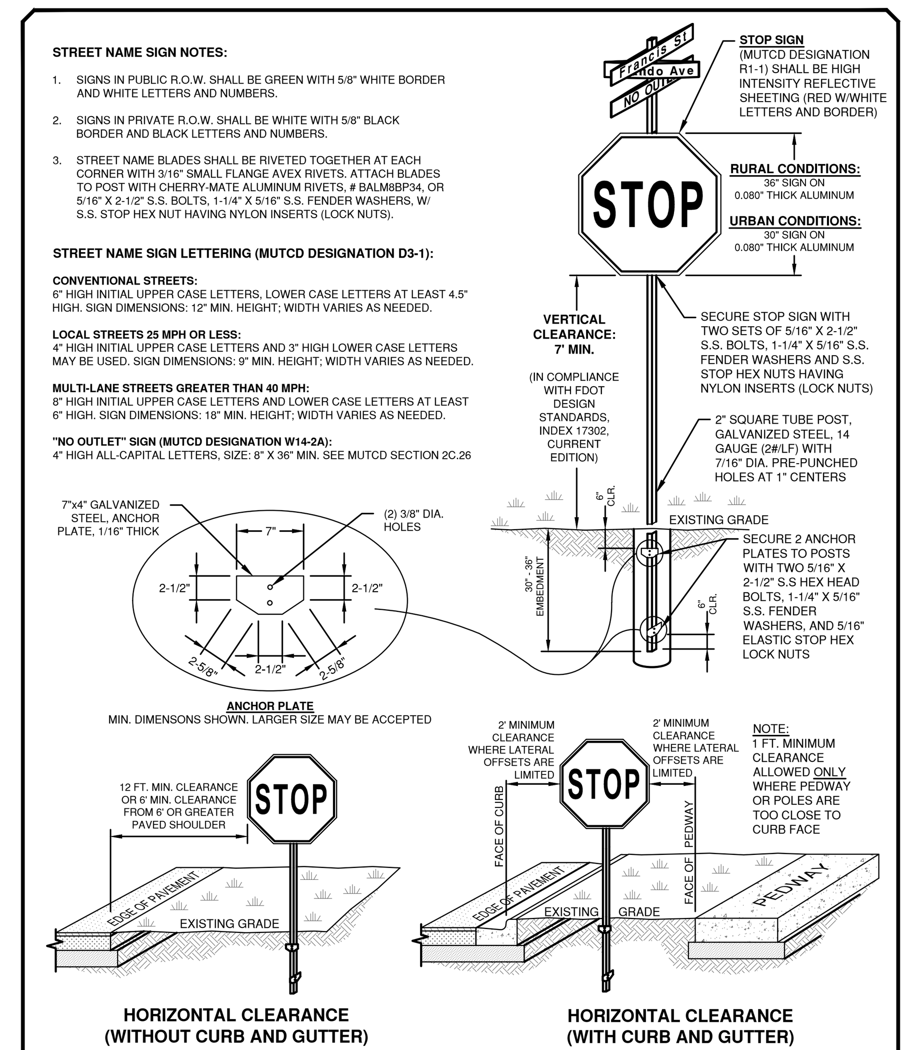

STOP SIGN AND STREET MARKER DETAILS

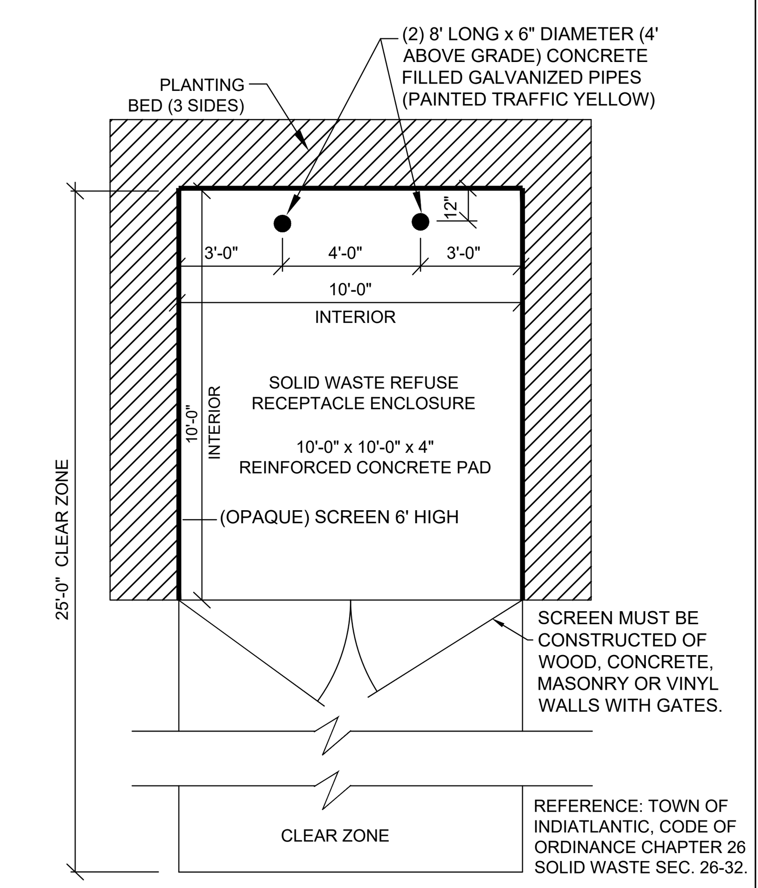

DUMPSTER ENCLOSURE DETAIL
N.T.S.

△1

1	INDIATLANTIC, FDOT, COUNTY COMMENTS	02-16-2021
	COMMENTS	XX-XX-XXXX
△	**REVISIONS**	**DATE**

JOB NO.	20-1060
DESIGNED	TAC
DRAWN	AFR
DATE	10-22-2020
CHECKED	BAM
DATE ISSUED	3/16/2021

MBV ENGINEERING, INC.
MOIA BOWLES VILLAMIZAR & ASSOCIATES
CIVIL ▪ STRUCTURAL ▪ SURVEYING ▪ ENVIRONMENTAL CA#3728
1250 W. EAU GALLIE BLVD, SUITE H
MELBOURNE, FLORIDA 32935
P: 321-253-1510 F:321-253-0911
ALSO WITH OFFICES IN:
VERO: 772-569-0035, FT PIERCE: 772-468-9055, PALM CITY: 772-426-9959

GENERAL DETAILS

TIFFANY'S BEACHSIDE
TOWN OF INDIALANTIC FLORIDA

BRUCE A. MOIA LICENSE No. 47529 STATE OF FLORIDA PROFESSIONAL ENGINEER
BRUCE A. MOIA DATE:
FL. P.E. #47529 3/16/2021

SHEET
C-10

20-1060
PRELIMINARY SET

W:\2020\20-1060 BEACHSIDE TIFFANYS\CAD\Site\20-1060 COVER-DETAILS.dwg 3/16/2021 3:04 PM TAINY C

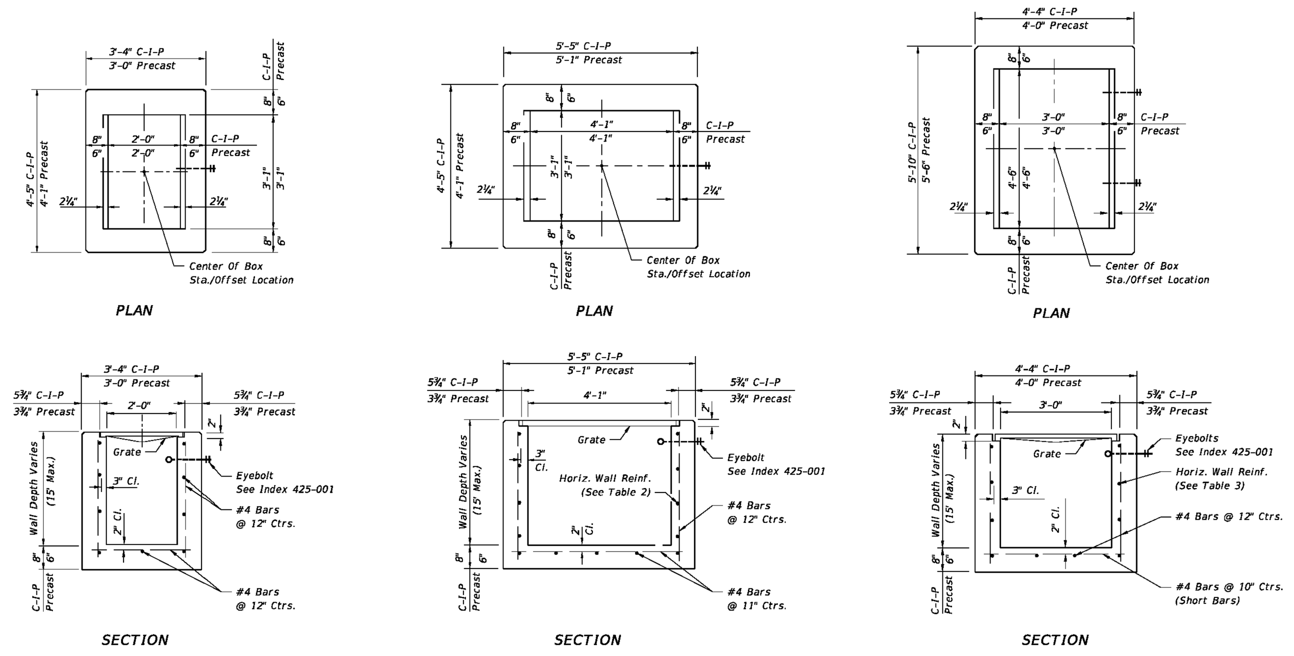

HORIZONTAL WALL REINFORCING SCHEDULES (TABLE 1)

WALL DEPTH	SCHEDULE	AREA (in.²/ft.)	MAX. SPACING BARS	MAX. SPACING WWR
0'-15'	A12	0.20	12"	8"

TYPE C

Recommended Maximum Pipe Size:

2'-0" Wall - 18" Pipe
3'-1" Wall - 24" Pipe (18" where an 18" pipe enters a 2'-0" wall)

HORIZONTAL WALL REINFORCING SCHEDULES (TABLE 2)

WALL DEPTH	SCHEDULE	AREA (in.²/ft.)	MAX. SPACING BARS	MAX. SPACING WWR
0'-6'	A12	0.20	12"	8"
6'-10'	A6	0.20	6"	5"
10'-13'	A4	0.20	4"	3"
10'-15'	B5.5	0.24	5½"	5"

TYPE D

Recommended Maximum Pipe Size:

3'-1" Wall - 24" Pipe
4'-1" Wall - 36" Pipe

HORIZONTAL WALL REINFORCING SCHEDULES (TABLE 3)

WALL DEPTH	SCHEDULE	AREA (in.²/ft.)	MAX. SPACING BARS	MAX. SPACING WWR
0'-5'	A12	0.20	12"	8"
0'-7.5'	A6	0.20	6"	5"
7.5'-10'	B5.5	0.24	5½"	5"
10'-15'	C6.5	0.37	6½"	6"

TYPE E

Recommended Maximum Pipe Size:

3'-0" Wall - 24" Pipe
4'-6" Wall - 36" Pipe

LAST REVISION 11/01/17 | REVISION | DESCRIPTION: | FDOT | FY 2020-21 STANDARD PLANS | DITCH BOTTOM INLET TYPES C, D, E AND H | INDEX 425-052 | SHEET 1 of 7

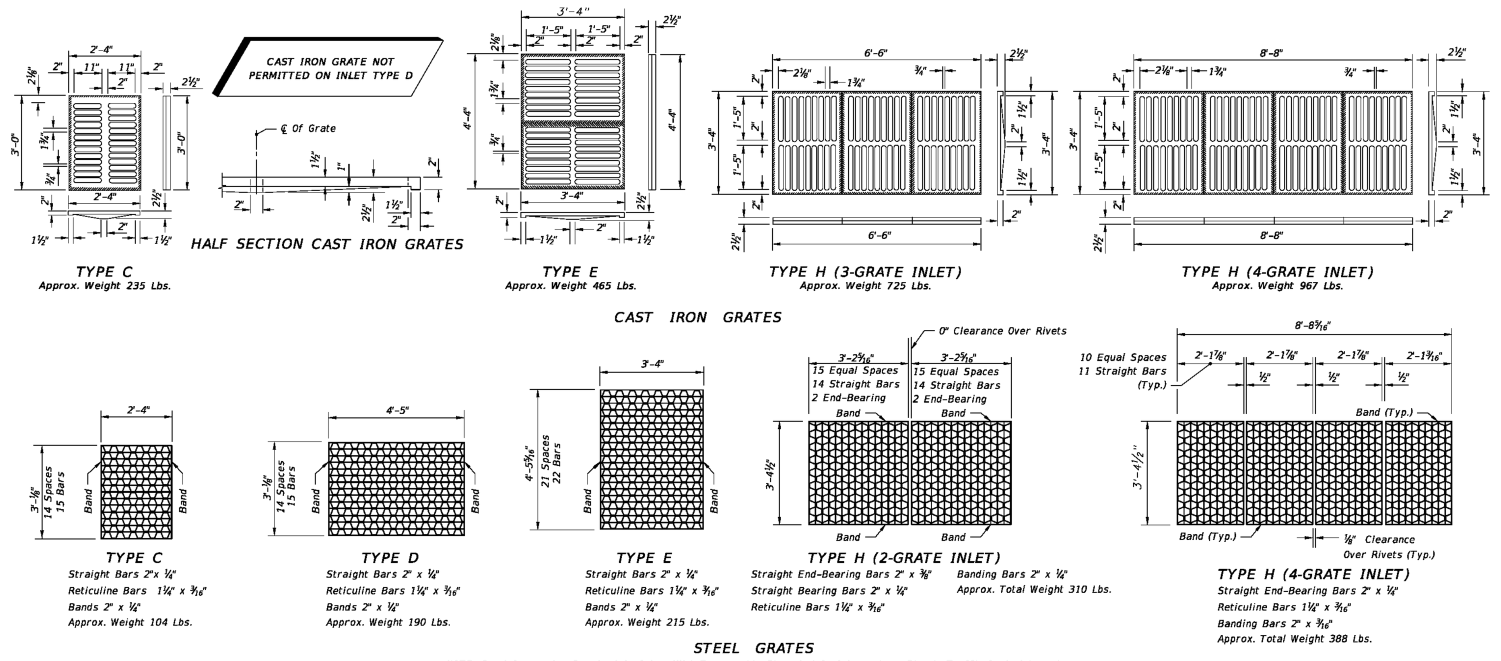

NOTE: Steel Grates Are Required On Inlets With Traversable Slots And On Inlets where Bicycle Traffic Is Anticipated.

GENERAL NOTES

1. These inlets are suitable for bicycle traffic and are to be used in ditches, medians and other areas subject to infrequent traffic loadings but are not to be placed in areas subject to any heavy wheel loads. These inlets may be placed in areas subject to occasional pedestrian traffic such as landscaped areas and pavement areas where pedestrians can walk around the inlet.
2. Inlets subject to minimal debris should be constructed without slots. Where debris is a problem inlets should be constructed with slots. Slotted inlets located within roadway clear zones and areas subject to pedestrians shall have traversable slots. The traversable slot modification is not adaptable to inlet Type H. Slots may be constructed at either or both ends as shown on plans. Traversable slots shall not be used in areas subject to occasional bicycle traffic.
3. Steel grates are to be used on all inlets where bicycle traffic is anticipated. Steel grates are to be used on all inlets with traversable slots. Either cast iron or steel grates may be used on inlets without slots where bicycle traffic is not anticipated. Either cast iron or steel grates may be used on all inlets with non-traversable slots. Subject to the selection described above, when Alternate G grate is specified in the plans, either the steel grate, hot dip galvanized after fabrication, or the cast iron grate may be used, unless the plans stipulate the particular type.
4. Recommended maximum pipe sizes shown are for concrete pipe. Size for other types of pipe must be checked for fit.
5. All exposed edges and corners shall be ¾" chamfer or tooled to ¼" radius.
6. Concrete inlet pavement to be used on inlets without slots and inlets with non-traversable slots only when called for in the plans; but required on all traversable slot inlets. Cost to be included in contract unit price for inlets. Quantities shown are for information only.
7. Traversable slots constructed in existing inlets shall be paid for as inlets partial. For conversion work and method of payment see 'TRAVERSABLE SLOT INLETS (PARTIAL) FOR EXISTING INLETS'.
8. Sodding to be used on all inlets not located in paved areas and paid for under contract unit price for Performance Turf, SY.
9. For supplementary details see Index 425-001.
10. All reinforcing is Grade 60 bars with 2" min. cover unless otherwise noted. Bars to be cut or bent for 1½" clearance around pipe opening. Provide one additional #4 bar above and at each side of pipe opening.

LAST REVISION 11/01/17 | REVISION | DESCRIPTION: | FDOT | FY 2020-21 STANDARD PLANS | DITCH BOTTOM INLET TYPES C, D, E AND H | INDEX 425-052 | SHEET 3 of 7

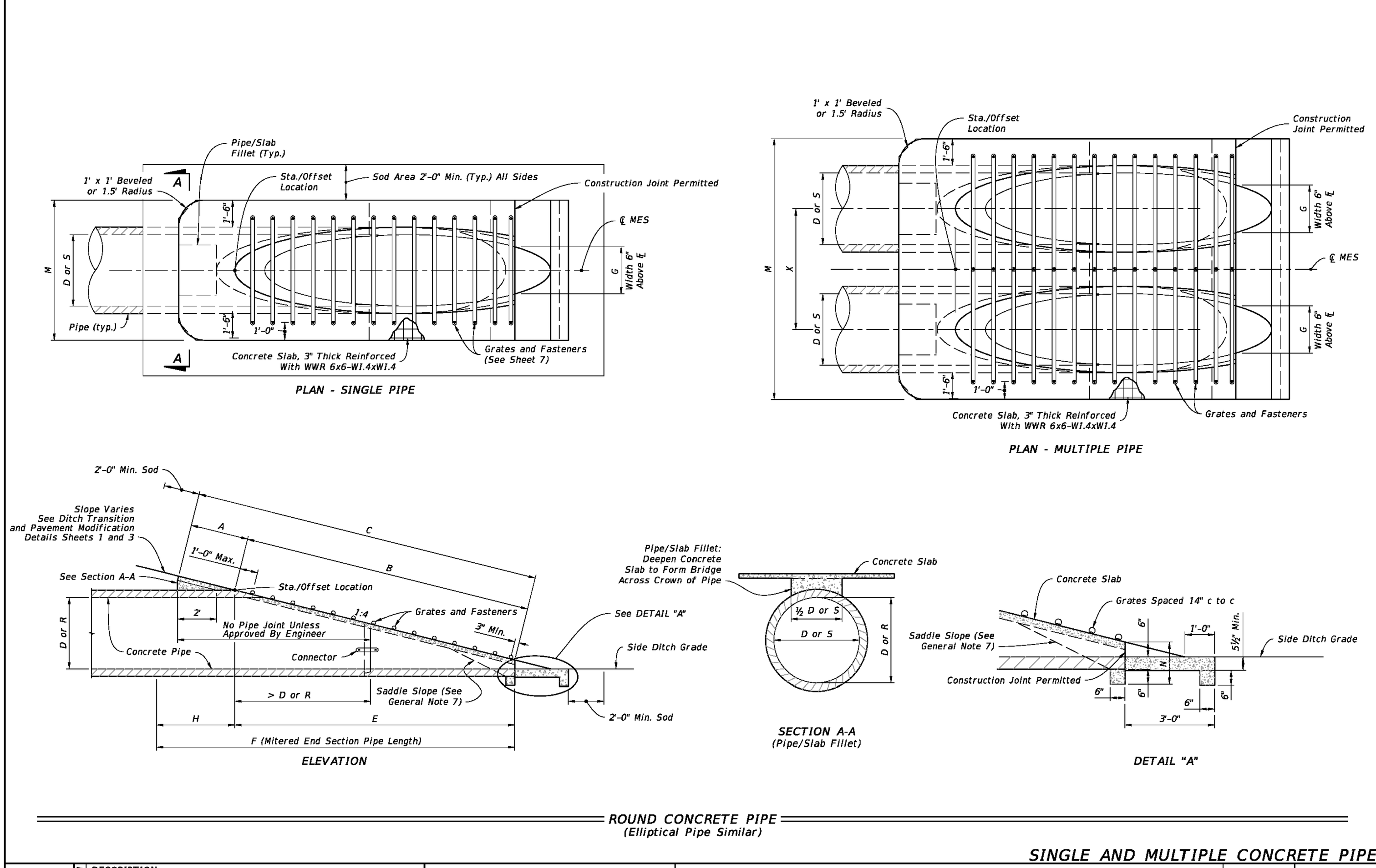

LAST REVISION 11/01/18 | REVISION | DESCRIPTION: | FDOT | FY 2020-21 STANDARD PLANS | SIDE DRAIN MITERED END SECTION | INDEX 430-022 | SHEET 2 of 7

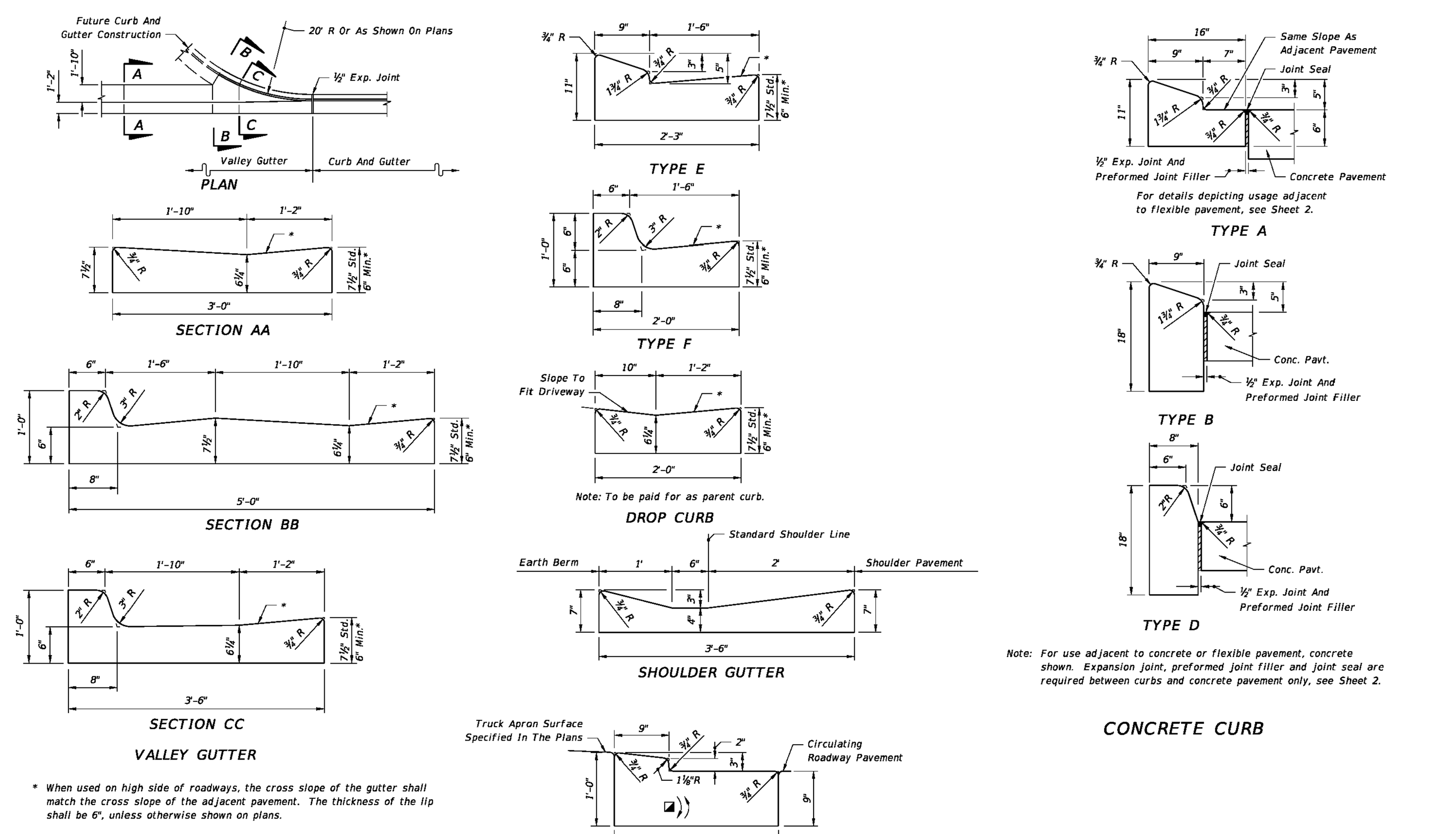

Note: For use adjacent to concrete or flexible pavement, concrete shown. Expansion joint, preformed joint filler and joint seal are required between curbs and concrete pavement only, see Sheet 2.

* When used on high side of roadways, the cross slope of the gutter shall match the cross slope of the adjacent pavement. The thickness of the lip shall be 6", unless otherwise shown on plans.

◪ Rotate entire section so that gutter cross slope matches slope of adjacent circulating roadway pavement.

For use adjacent to concrete or flexible pavement. For details depicting usage adjacent to flexible pavement, see Sheet 2. Expansion joint, preformed joint filler and joint seal are required between curb & gutter and concrete pavement only, see Sheet 2.

CONCRETE CURB AND GUTTER

LAST REVISION 11/01/17 | REVISION | DESCRIPTION: | FDOT | FY 2020-21 STANDARD PLANS | CURB AND GUTTER | INDEX 520-001 | SHEET 1 of 2

GENERAL NOTES:

1. Construct sidewalks in accordance with Specification 522. Use 6" concrete for Sidewalks and Curb Ramps Located within Curb Returns (See Plan View). Install all other concrete with thickness as shown, unless otherwise detailed in the Plans.
2. Include detectable warnings on sidewalk curb ramps in accordance with Index 522-002.
3. For Driveways see Index 522-003.
4. Bond breaker material can be any impermeable coated or sheet membrane or preformed material having a thickness of not less than 6 mils and not more than ½".
5. Construct sidewalks with Edge Beam through the limits of any surface mounted Pedestrian/Bicycle Railing or Pipe Guiderail shown in the plans. (See RAILING DETAIL)

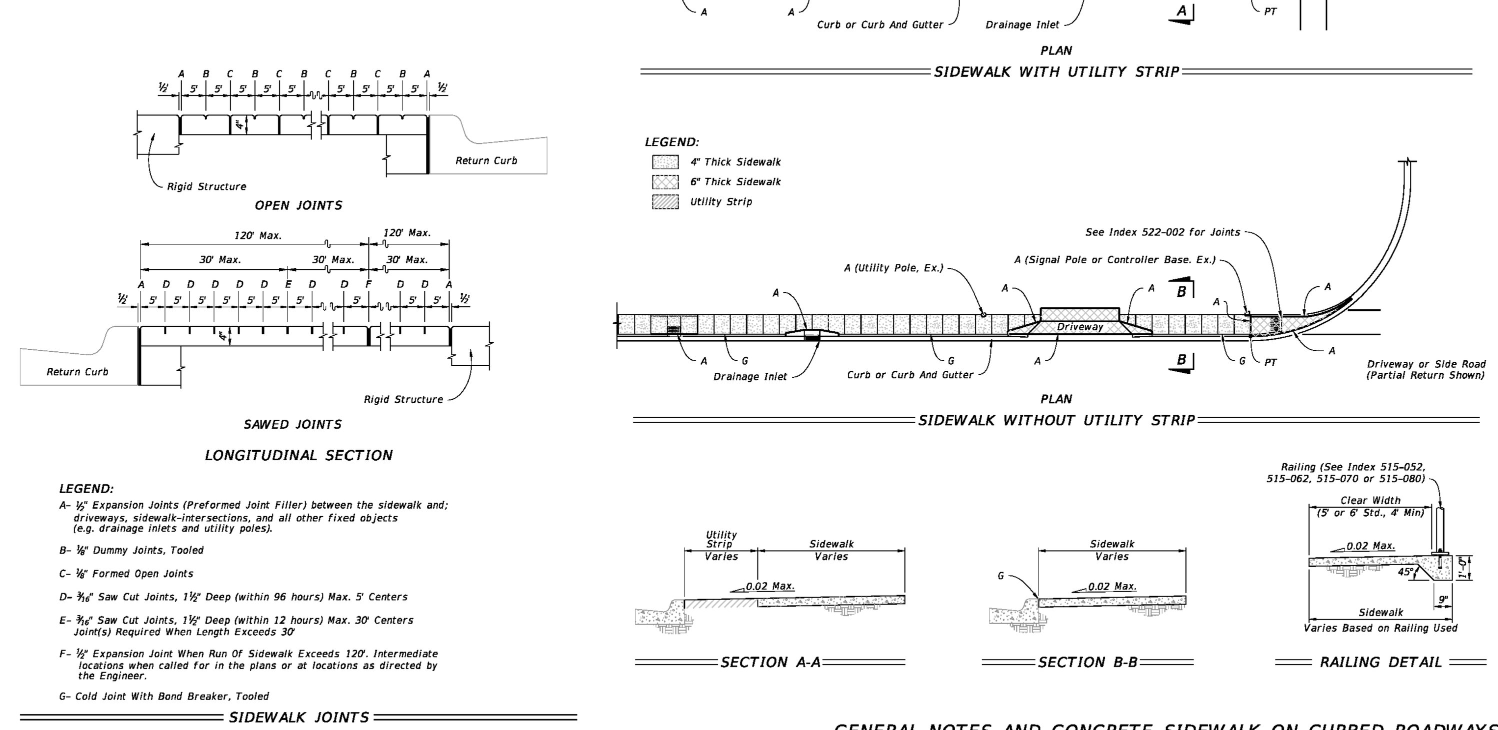

LEGEND:

A- ½" Expansion Joints (Preformed Joint Filler) between the sidewalk and; driveways, sidewalk-intersections, and all other fixed objects (e.g. drainage inlets and utility poles).
B- ⅛" Dummy Joints, Tooled
C- ⅛" Formed Open Joints
D- $^3/_{16}$" Saw Cut Joints, 1½" Deep (within 96 hours) Max. 5' Centers
E- $^3/_{16}$" Saw Cut Joints, 1½" Deep (within 12 hours) Max. 30' Centers Joint(s) Required When Length Exceeds 30'
F- ½" Expansion Joint When Run Of Sidewalk Exceeds 120'. Intermediate locations when called for in the plans or at locations as directed by the Engineer.
G- Cold Joint With Bond Breaker, Tooled

SIDEWALK JOINTS

GENERAL NOTES AND CONCRETE SIDEWALK ON CURBED ROADWAYS

LAST REVISION 11/01/18 | REVISION | DESCRIPTION: | FDOT | FY 2020-21 STANDARD PLANS | CONCRETE SIDEWALK | INDEX 522-001 | SHEET 1 of 2

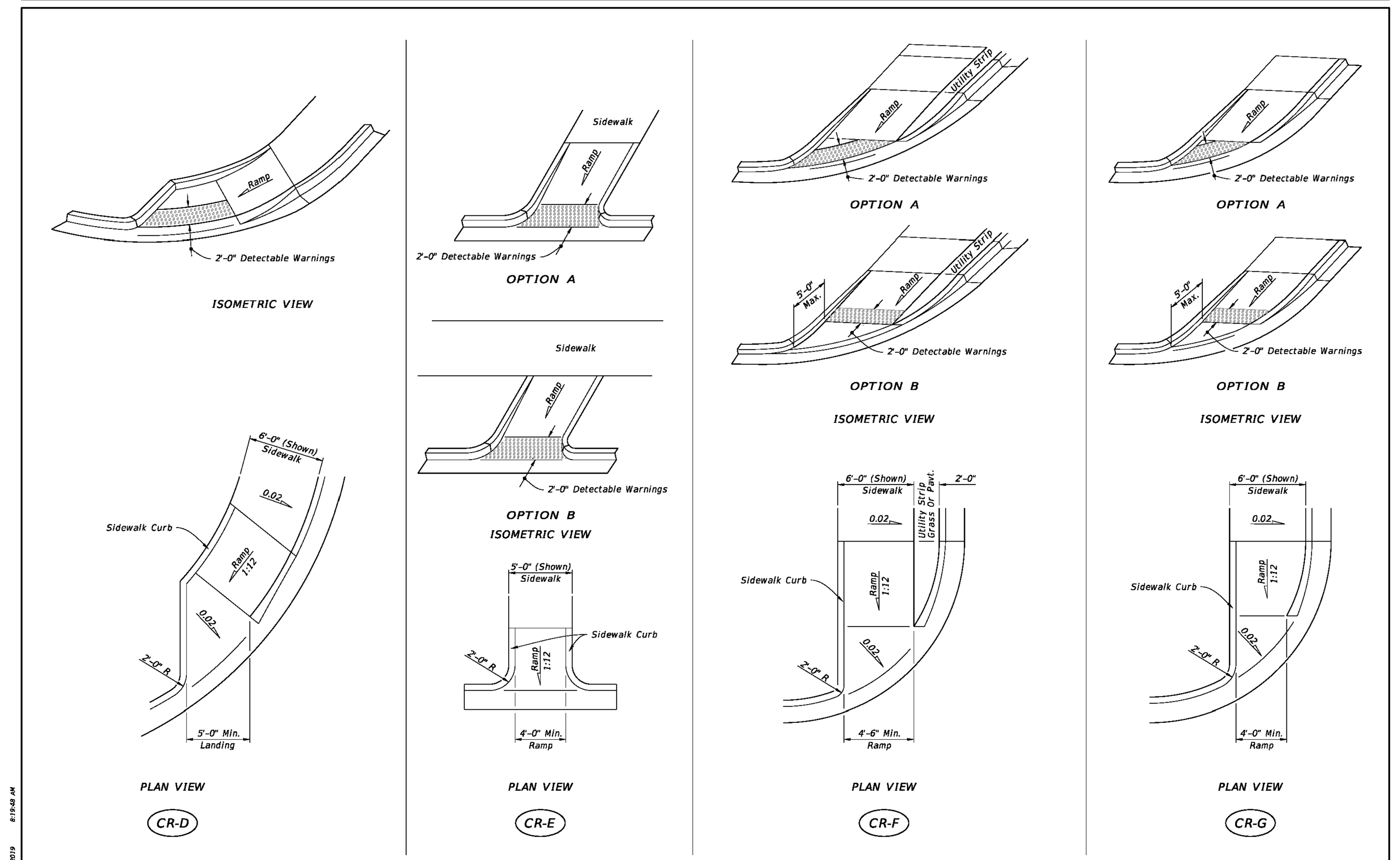

SIDEWALK CURB RAMPS CR-D, CR-E, CR-F & CR-G

LAST REVISION 11/01/18 | REVISION | DESCRIPTION: | FDOT | FY 2020-21 STANDARD PLANS | DETECTABLE WARNINGS AND SIDEWALK CURB RAMPS | INDEX 522-002 | SHEET 4 of 8

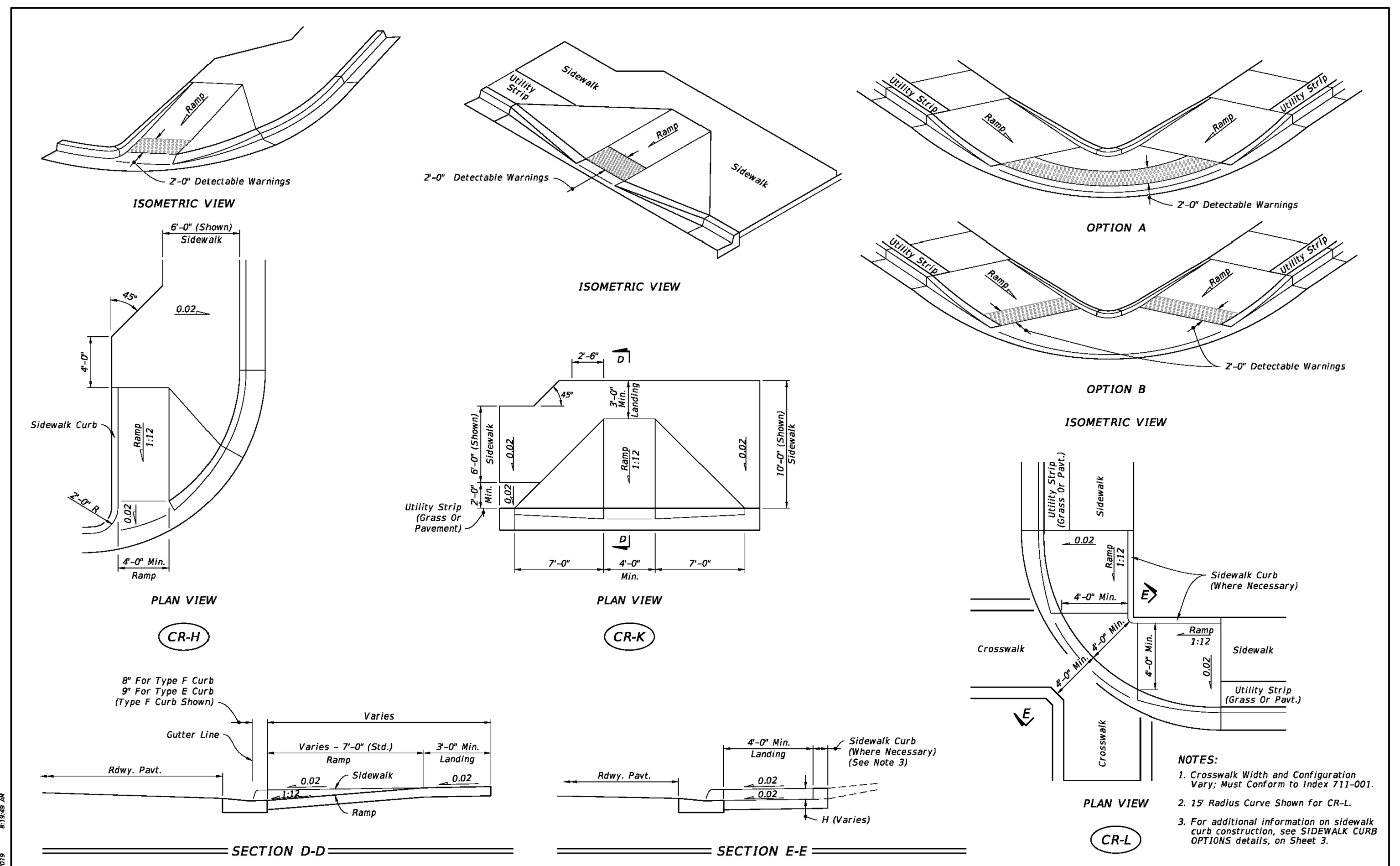

NOTES:

1. Crosswalk Width and Configuration Vary; Must Conform to Index 711-001.
2. 15' Radius Curve Shown for CR-L.
3. For additional information on sidewalk curb construction, see SIDEWALK CURB OPTIONS details, on Sheet 3.

SIDEWALK CURB RAMPS CR-H, CR-K & CR-L

LAST REVISION 11/01/18 | REVISION | DESCRIPTION: | FDOT | FY 2020-21 STANDARD PLANS | DETECTABLE WARNINGS AND SIDEWALK CURB RAMPS | INDEX 522-002 | SHEET 5 of 8

NOTES:

1. Where crosswalk markings are used, ramps must fall within the crosswalk limits. A clear space of 48" minimum is required at the bottom of the ramp within a marked crosswalk. If crosswalk markings are not present, a clear space of 48" minimum is required at the bottom of the ramp outside of active travel lanes.
2. Crosswalk widths and configurations vary; must conform to Index 711-001.
3. Flangeway Gap may be up to 3" for Freight-only Railways.

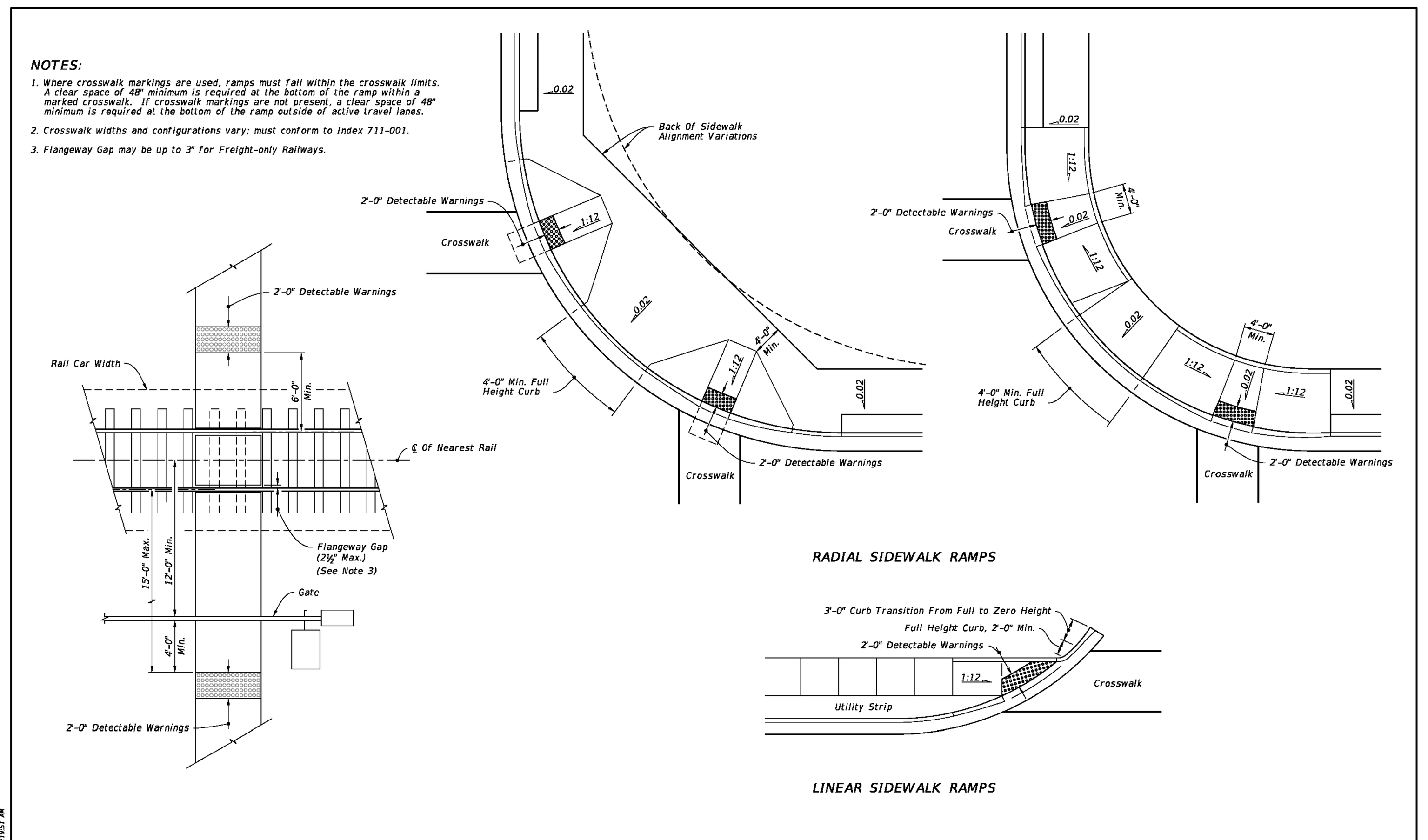

RAILROAD CROSSING AND CURB RAMPS AT CURBED RETURNS

LAST REVISION 11/01/17 | REVISION | DESCRIPTION: | FDOT | FY 2020-21 STANDARD PLANS | DETECTABLE WARNINGS AND SIDEWALK CURB RAMPS | INDEX 522-002 | SHEET 8 of 8

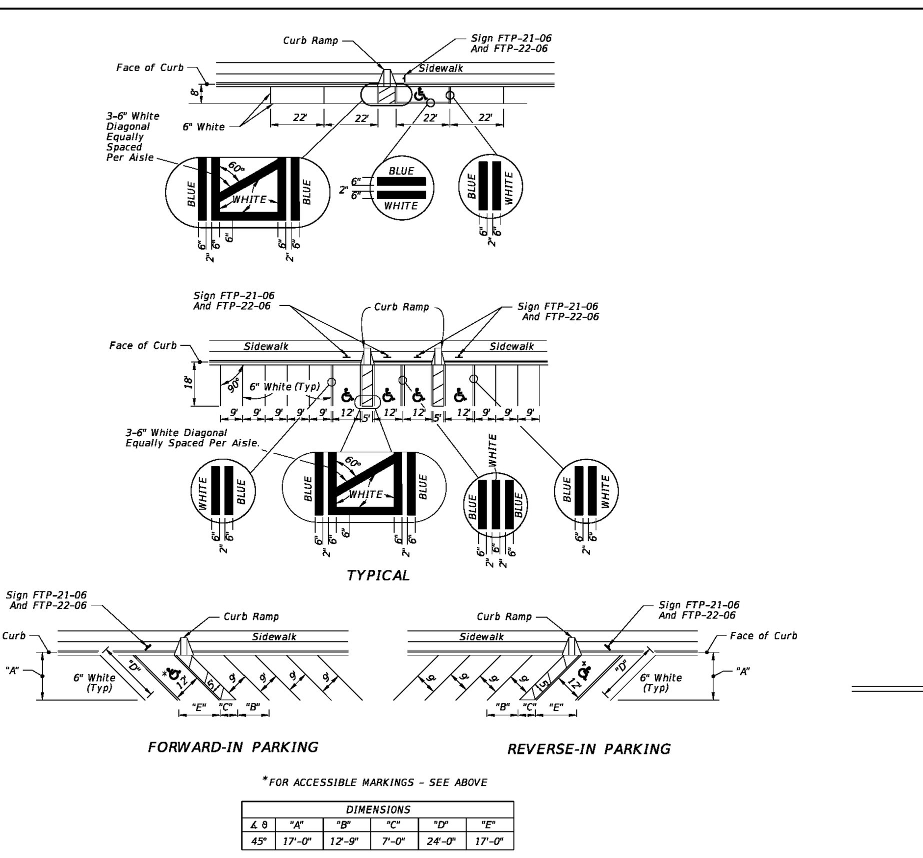

*FOR ACCESSIBLE MARKINGS - SEE ABOVE

DIMENSIONS					
∠ θ	"A"	"B"	"C"	"D"	"E"
45°	17'-0"	12'-9"	7'-0"	24'-0"	17'-0"

PAVEMENT MARKING FOR PARKING

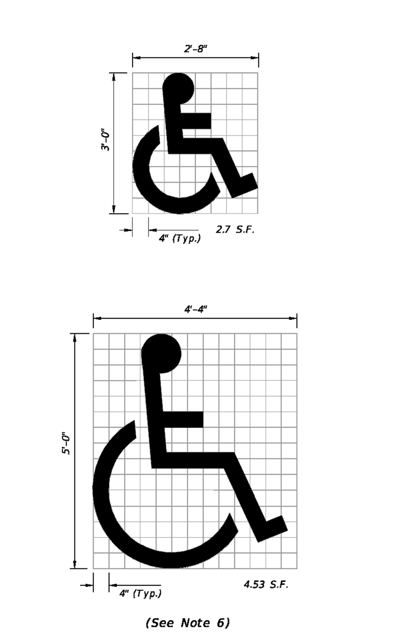

(See Note 6)

UNIVERSAL SYMBOL OF ACCESSIBILITY

NOTES:

1. Dimensions are to the centerline of markings.
2. An Access Aisle is required for each accessible space when angle parking is used.
3. Criteria for pavement markings only, not public sidewalk curb ramp locations. For ramp locations refer to plans.
4. Tint blue pavement markings to match color 15180 of Federal Standards 595a.
5. Mount FTP-22-06 sign below the FTP-21-06 sign.
6. Use of the pavement symbol in accessible parking spaces is optional. When pavement symbol is used, the symbol is either 3'-0" or 5'-0" high and white in color.

LAST REVISION 11/01/19 | REVISION | DESCRIPTION: | FDOT | FY 2020-21 STANDARD PLANS | PAVEMENT MARKINGS | INDEX 711-001 | SHEET 12 of 13

REVISIONS		
1	INDIATLANTIC, FDOT, COUNTY COMMENTS	02-16-2021
	COMMENTS	XX-XX-XXXX
2		
3		
4		
5		
6		
7		
8		

JOB NO.	20-1060
DESIGNED	TAC
DRAWN	AFR
DATE	10-22-2020
CHECKED	BAM
DATE ISSUED	3/16/2021

MBV ENGINEERING, INC.
MOIA BOWLES VILLAMIZAR & ASSOCIATES
CIVIL ▪ STRUCTURAL ▪ SURVEYING ▪ ENVIRONMENTAL CA#3728
1250 W. EAU GALLIE BLVD, SUITE H
MELBOURNE, FLORIDA 32935
P: 321-253-1510 F:321-253-0911
ALSO WITH OFFICES IN:
VERO: 772-569-0035, FT PIERCE: 772-468-9055, PALM CITY: 772-426-9959

FDOT DETAILS

TIFFANY'S BEACHSIDE
TOWN OF INDIALANTIC FLORIDA

BRUCE A. MOIA LICENSE No. 47529 STATE OF FLORIDA PROFESSIONAL ENGINEER

BRUCE A. MOIA DATE:
FL. P.E. #47529 3/16/2021

SHEET
C-11

20-1060
PRELIMINARY SET

W:\2020\20-1060 BEACHSIDE TIFFANYS\CAD\Site\20-1060 COVER-DETAILS.dwg 3/16/2021 3:04 PM TAINY C

UTILITY DETAILS

PIPE BEDDING DETAILS TYPE "A" & "B"

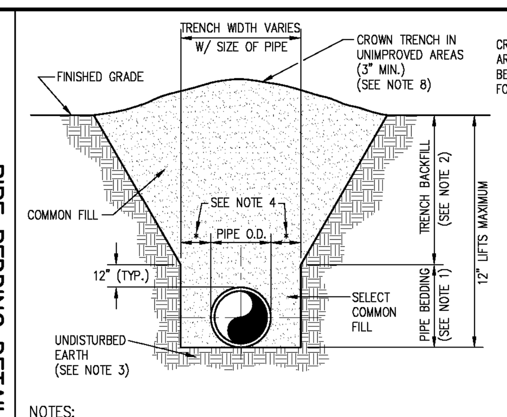

NOTES:

1. PIPE BEDDING: SELECT COMMON FILL COMPACTED TO 98% UNDER ROADS, CURB, GUTTER AND SHOULDERS; AND 95% IN ALL OTHER PLACES, OF THE MAXIMUM DRY DENSITY AS DETERMINED BY THE MODIFIED PROCTOR COMPACTION TEST, AASHTO T-180
2. TRENCH BACKFILL: COMMON FILL COMPACTED TO 98% UNDER ROADS, CURB, GUTTER AND SHOULDERS; AND 95% IN ALL OTHER PLACES, OF THE MAXIMUM DRY DENSITY AS DETERMINED BY THE MODIFIED PROCTOR COMPACTION TEST, AASHTO T-180
3. PIPE BEDDING UTILIZING SELECT COMMON FILL OR BEDDING ROCK IN ACCORDANCE WITH TYPE "A" BEDDING AND TRENCHING DETAIL MAY BE REQUIRED AS DIRECTED BY THE ENGINEER.
4. (*): 15" MAX. FOR PIPE DIAMETER LESS THAN 24", AND 24" MAX. FOR PIPE DIAMETER 24" AND LARGER.
5. WATER SHALL NOT BE PERMITTED IN THE TRENCH DURING CONSTRUCTION.
6. ALL PIPE TO BE INSTALLED WITH BELL FACING UPSTREAM TO THE DIRECTION OF THE FLOW FOR SEWERS.
7. REFER TO SPECIFICATIONS FOR SHEETING AND BRACING IN EXCAVATIONS.
8. FINAL RESTORATION IN IMPROVED AREAS SHALL BE IN COMPLIANCE WITH SPECIFICATIONS. ROAD SURFACE RESTORATION SHALL COMPLY WITH SPECIFICATIONS.

DETAIL – TYPE B

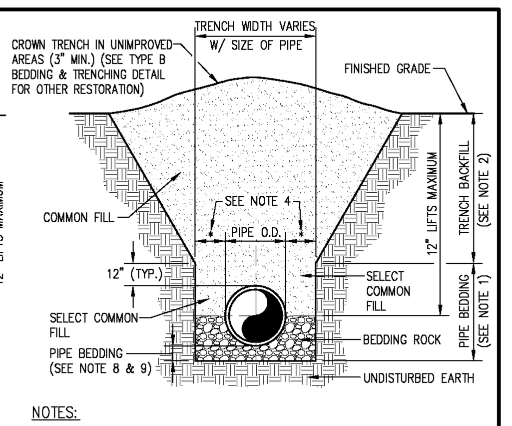

NOTES:

1. PIPE BEDDING: SELECT COMMON FILL COMPACTED TO 98% UNDER ROADS, CURB, GUTTER AND SHOULDERS; AND 95% IN ALL OTHER PLACES, OF THE MAXIMUM DRY DENSITY AS DETERMINED BY THE MODIFIED PROCTOR COMPACTION TEST, AASHTO T-180
2. TRENCH BACKFILL: COMMON FILL COMPACTED TO 98% UNDER ROADS, CURB, GUTTER AND SHOULDERS; AND 95% IN ALL OTHER PLACES, OF THE MAXIMUM DRY DENSITY AS DETERMINED BY THE MODIFIED PROCTOR COMPACTION TEST, AASHTO T-180
3. USE TYPE "A" BEDDING TO BE DETERMINED IN THE FIELD AS DIRECTED BY THE ENGINEER.
4. (*): 15" MAX. FOR PIPE DIAMETER LESS THAN 24", AND 24" MAX. FOR PIPE DIAMETER 24" AND LARGER.
5. WATER SHALL NOT BE PERMITTED IN THE TRENCH DURING CONSTRUCTION.
6. ALL PIPE TO BE INSTALLED WITH BELL FACING UPSTREAM TO THE DIRECTION OF FLOW FOR SEWERS.
7. REFER TO SPECIFICATIONS FOR SHEETING AND BRACING IN EXCAVATIONS.
8. GRAVITY SEWERS SHALL UTILIZE TYPE "A" BEDDING, IF REQUIRED BY THE ENGINEER. BEDDING DEPTH SHALL BE 4" MINIMUM FOR PIPE DIAMETER LESS THAN 15", AND 6" MINIMUM FOR PIPE DIAMETER 16" AND LARGER.
9. DEPTH FOR REMOVAL OF UNSUITABLE MATERIAL SHALL GOVERN DEPTH OF BEDDING ROCK BELOW THE PIPE. THE ENGINEER SHALL DETERMINE IN THE FIELD REQUIRED REMOVAL OF UNSUITABLE MATERIAL TO REACH SUITABLE FOUNDATION.

DETAIL – TYPE A

REV:	REV: BY	CITY OF MELBOURNE UTILITIES ADMINISTRATION	SCALE: N.T.S.
DATE: 7/1/16	JOB NO:		DWG NO: A-100
DRAWN BY: J.R.P.	DSGN. BY L.A.M.		

UTILITY PIPE MINIMUM SEPARATION REQUIREMENTS TABLE

HORIZONTAL & VERTICAL MINIMUM SEPARATION REQUIREMENTS

PROPOSED UTILITY	POTABLE WATER		RECLAIMED WATER (NOTE 2)		WASTEWATER (GRAVITY & FM)		STORM SEWER	
	HORIZ.	VERT.	HORIZ.	VERT.	HORIZ.	VERT.	HORIZ.	VERT.
POTABLE WATER	N/A	N/A	3'	12"	6'/10' NOTE 3	12" NOTE 4	3'	12" NOTES 1 & 4
RECLAIMED WATER NOTE 2	3'	12"	N/A	N/A	3'	12"	3' NOTE 5	12" NOTE 1
WASTEWATER (GRAVITY & FM)	6'/10' NOTE 3	12" NOTE 4	3'	12"	N/A	N/A	3' NOTE 5	12" NOTE 1

SEPARATION REQUIREMENTS COMPLY WITH MINIMUM FDEP SEPARATION REQUIREMENTS OUTLINES IN 62-555.314, F.A.C. VARIANCES FROM THE FDEP REQUIREMENTS MUST COMPLY WITH 62-555.314, F.A.C., AND MUST BE APPROVED INDIVIDUALLY BY BOTH FDEP AND CITY OF MELBOURNE.

DISTANCES GIVEN ARE FROM OUTSIDE OF PIPE TO OUTSIDE OF PIPE.

NO WATER SHALL PASS THROUGH OR COME IN CONTACT WITH ANY PART OF SANITARY OR STORMWATER MANHOLE OR STRUCTURE.

NOTES:

1. WHERE UTILITY PIPE CROSSES UNDER STORMWATER PIPE WITH LESS THAN 18 INCHES OF SEPARATION, STORMWATER PIPE SHALL BE SUPPORTED BY CONCRETE SADDLE.
2. FOR THE PURPOSE OF THIS TABLE AND SEPARATION REQUIREMENTS, RECLAIMED WATER SHALL MEAN UNRESTRICTED, PUBLIC ACCESS RECLAIMED WATER AS DEFINED BY PART III OF CHAPTER 62-610, F.A.C., ADDITIONAL SEPARATIONS SHALL APPLY FOR RECLAIMED WATER NOT REGULATED UNDER PART III OF CHAPTER 62-610, F.A.C.
3. MINIMUM SEPARATION IS 6 FEET, AND PREFERABLY 10 FEET, BETWEEN POTABLE WATER AND WASTEWATER GRAVITY SEWER OR FORCE MAIN.
4. WHERE POTABLE WATER MAINS CROSS OVER WASTEWATER GRAVITY SEWER OR STORM SEWER, 6 INCH MINIMUM SEPARATION IS ACCEPTABLE, HOWEVER, 12 INCHES OF SEPARATION IS PREFERRED.
5. THIS SEPARATION REQUIREMENT IS FOR ACCESSIBILITY PURPOSES AND NOT A FDEP REQUIREMENT. VARIANCES FROM THESE PREFERRED SEPARATIONS MAY BE APPROVED BY THE CITY ON A CASE BY CASE BASIS.

REV:	REV: BY	CITY OF MELBOURNE UTILITIES ADMINISTRATION	SCALE: N.T.S.
DATE: 7/1/16	JOB NO:		DWG NO: A-103
DRAWN BY: J.R.P.	DSGN. BY L.A.M.		

GATE VALVE AND BOX DETAIL

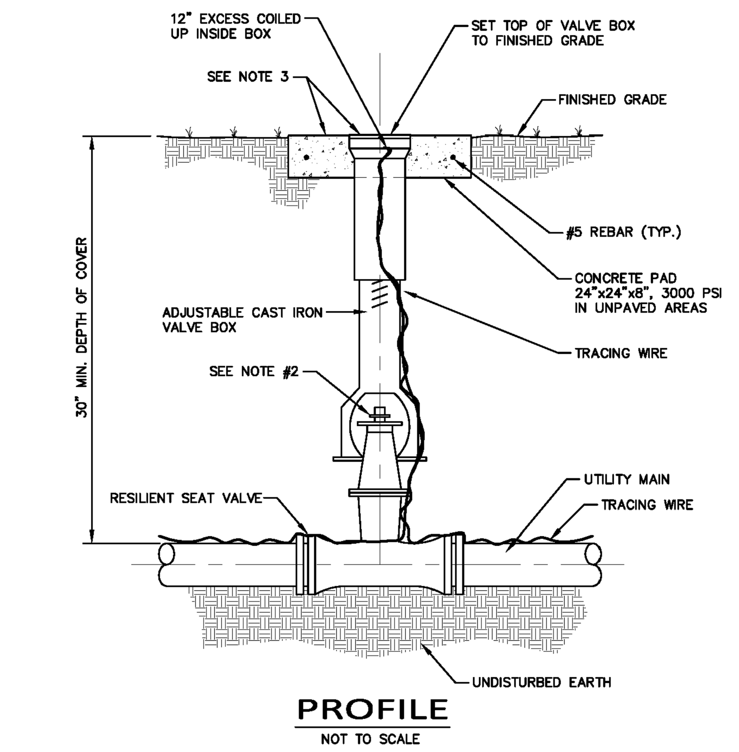

PROFILE
NOT TO SCALE

NOTES:

1. FIELD MANUFACTURED VALVE BOX EXTENSIONS NOT PERMITTED. CITY SHALL GIVE APPROVAL FOR FIELD EXTENSION ONLY WHEN VALVE DEPTH EXCEEDS VALVE BOX HEIGHTS OBTAINABLE THROUGH MANUFACTURERS LISTED IN APL.
2. VALVE NUT EXTENSIONS SHALL BE INSTALLED ON VALVE NUTS DEEPER THAN 48 INCHES FROM FINISH GRADE. EXTENSION SHALL BE INSTALLED SO OPERATING NUT IS 12 TO 20 INCHES BELOW FINISH GRADE.
3. FOR VALVE BOX LID AND CONCRETE PAD DETAIL, SEE A-115
4. SIDE ACTUATED GATE VALVES MAY BE REQUIRED WHERE DEPTH REQUIREMENTS DICTATE.

REV:	REV: BY	CITY OF MELBOURNE UTILITIES ADMINISTRATION	SCALE: N.T.S.
DATE: 7/1/16	JOB NO:		DWG NO: A-113
DRAWN BY: J.R.P.	DSGN. BY L.A.M.		

TYPICAL TAPPING SLEEVE SERVICE CONNECTION – POTABLE AND RECLAIMED

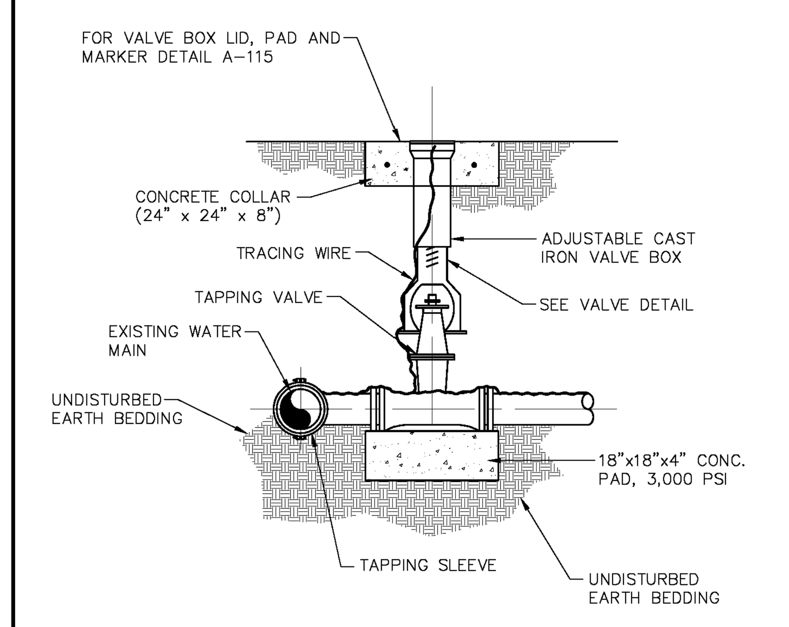

REV:	REV: BY	CITY OF MELBOURNE UTILITIES ADMINISTRATION	SCALE: N.T.S.
DATE: 7/1/16	JOB NO:		DWG NO: A-120
DRAWN BY: J.R.P.	DSGN. BY L.A.M.		

TYPICAL FIRE HYDRANT DETAIL

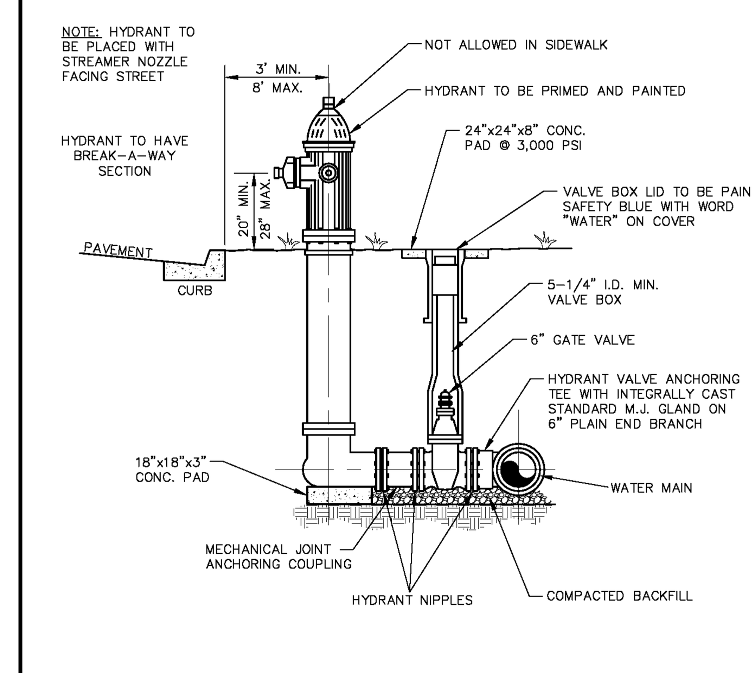

NOTE: ALL EXTERIOR BOLTS AND NUTS SHALL BE STAINLESS STEEL.

REV:	REV: BY	CITY OF MELBOURNE UTILITIES ADMINISTRATION	SCALE: N.T.S.
DATE: 7/1/16	JOB NO:		DWG NO: A-200
DRAWN BY: C.S.	DSGN. BY L.A.M.		

3/4", 1", 1-1/2" OR 2" COMMERCIAL POTABLE WATER METER

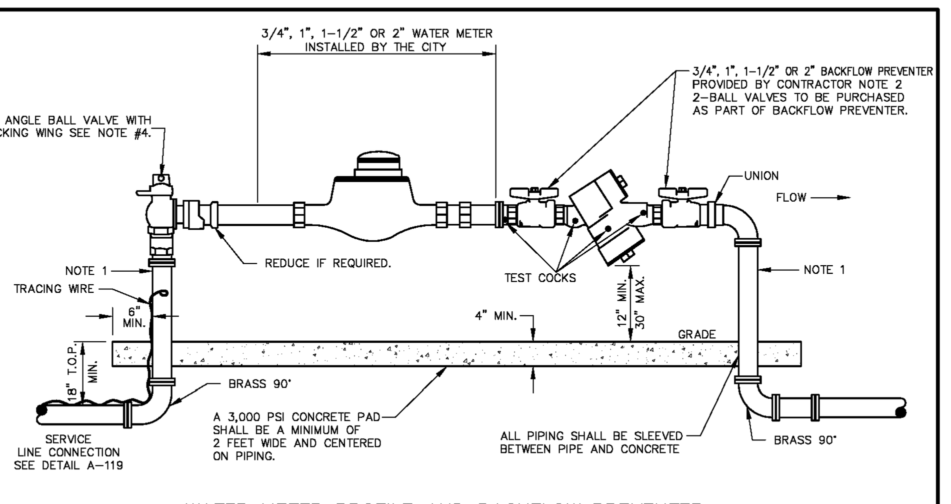

WATER METER PROFILE AND BACKFLOW PREVENTER

NOTES:

1. ALL PIPING AND FITTINGS SHALL BE THREADED BRASS, TO THE POINT WHERE THE 90° BEND MEETS THE CUSTOMER'S SERVICE LINE UNDERGROUN (EXCEPTION FOR ANGLED BALL VALVE WITH METER FLANGE)
2. TYPE OF BACKFLOW PREVENTER IS TO BE DETERMINED BY THE CITY OF MELBOURNE UTILITIES OPERATIONS IN ACCORDANCE WITH THE CITY'S CROSS CONNECTION CONTROL MANUAL.

   BACKFLOW PREVENTER TO BE PROVIDED BY THE CONTRACTOR AND INSTALLED IN STRICT ACCORDANCE WITH MANUFACTURER'S INSTRUCTIONS. BACKFLOW PREVENTER AND ASSOCIATED PIPING TO BE MAINTAINED BY CUSTOMER.
3. ASSEMBLY TO BE PRIMED AND PAINTED BLUE. SEE APPROVED PRODUCTS LIST FOR APPROVED PAINT.
4. ANGLE BALL VALVE FOR 3/4" OR 1" METERS SHALL BE FIP INLET XFIP OUTLET. ANGLE BALL VALVE FOR 1-1/2" OR 2" METERS SHALL BE FIP INLET X METER FLANGE.

REV:	REV: BY	CITY OF MELBOURNE UTILITIES ADMINISTRATION	SCALE: N.T.S.
DATE: 7/1/16	JOB NO:		DWG NO: A-201
DRAWN BY: J.R.P.	DSGN. BY L.A.M.		

Notes – Sewer Service Conn.

Notes:

1. Service laterals must be located in front of the property to be served.
2. Service laterals shall extend two feet inside the property and shall be constructed regardless of benefit to or ownership of adjacent lots or parcels.
3. Service laterals are to be located in side property easements.
4. Service laterals shall be located to avoid conflict with other utilities.
5. Number and location of service laterals for large parcels shall be determined on a case-by-case basis.
6. Service laterals shall be located at the opposite property line when in conflict with storm drainage systems.
7. Service lateral locations shall be marked along the outside edge of curb with a sawcut "S" or by a metal tab set into the pavement for roadways without curb.
8. Electronic marker disks are required.
9. Pipe and fittings for service laterals shall be of the same material as the main and shall meet the requirements of ASTM D1784.
10. Each service shall be staked prior to installation by an engineer or surveyor registered in the State of Florida or an employee under his direct supervision.
11. Location and finished grade of ground shall be staked where the lateral crosses the right of way line prior to installation.
12. Service laterals shall be provided for sewer service to adjacent lots and parcels when a gravity sewer main is constructed.
13. Concrete encasement required for all piping except PVC. PVC connections will be made with a standard PVC sewer wye and a gasketed slip-on fitting.
14. All services shall be a minimum of six inches in diameter.

	Notes Sewer Service Conn.	US-10
Brevard County Utility Services		January 2018

Sewer Service Conn.

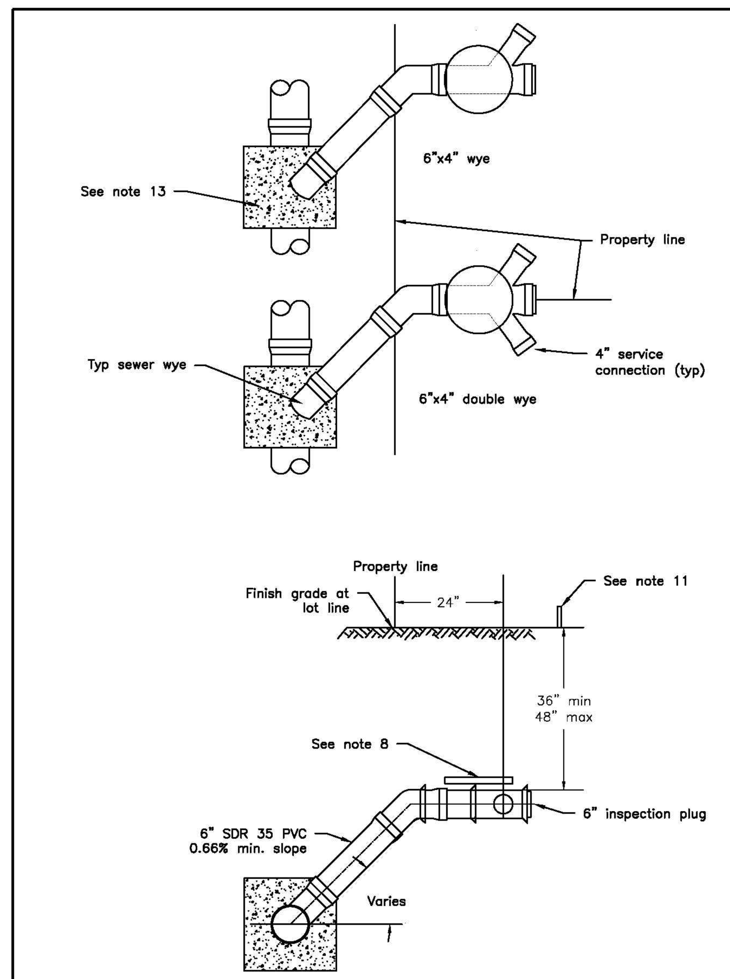

Scale 1/2 " = 1 foot	Sewer Service Conn.	US-11
Brevard County Utility Services		January 2018

Sewer Cleanout

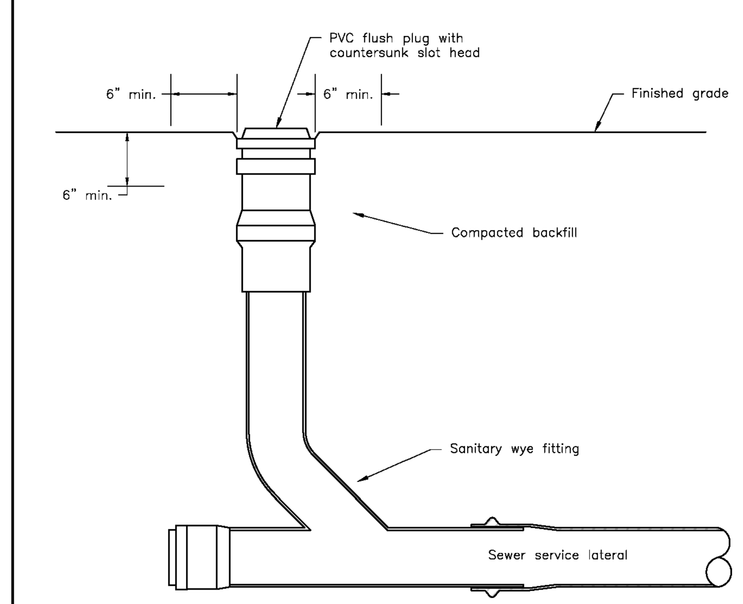

NOTES:

1. Cleanout diameter to match service lateral diameter.
2. Maximum spacing distance between cleanouts is 100 feet.
3. All cleanouts within vehicular traffic areas to have traffic bearing covers.
4. Cleanouts shall not be located in sidewalks or driveways.
5. Cleanouts shall not be substituted for manholes or installed at the end of mains greater than 150 feet in length.
6. Cleanouts shall be installed within 2' of the property or easement line.
7. Cleanouts are not permitted in dry detention areas.

Scale 1" = 1 foot	Sewer Cleanout	US-12
Brevard County Utility Services		January 2018

Sewer Clean-out Traffic Bearing

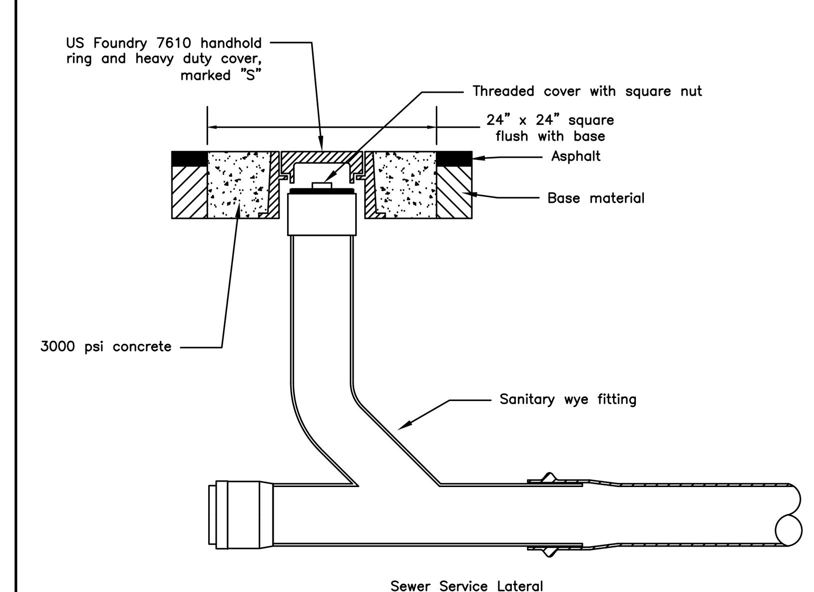

Notes:

1. Cleanout diameter to match service lateral diameter.
2. Maximum spacing between cleanouts is 100 feet.
3. Cleanouts located in vehicluar traffic areas to have traffic bearing covers.
4. Cleanouts shall not be located in sidewalks or driveways.
5. Cleanouts shall not be substituted for manholes or installed at the end of mains greater than 150 feet in length.
6. Cleanouts shall be installed within 2' of the property or easement line.
7. Cleanouts are not permitted in dry detention areas

Scale 1" = 1 foot	Sewer Clean-out Traffic Bearing	US-13
Brevard County Utility Services		January 2018

Grease Interceptor

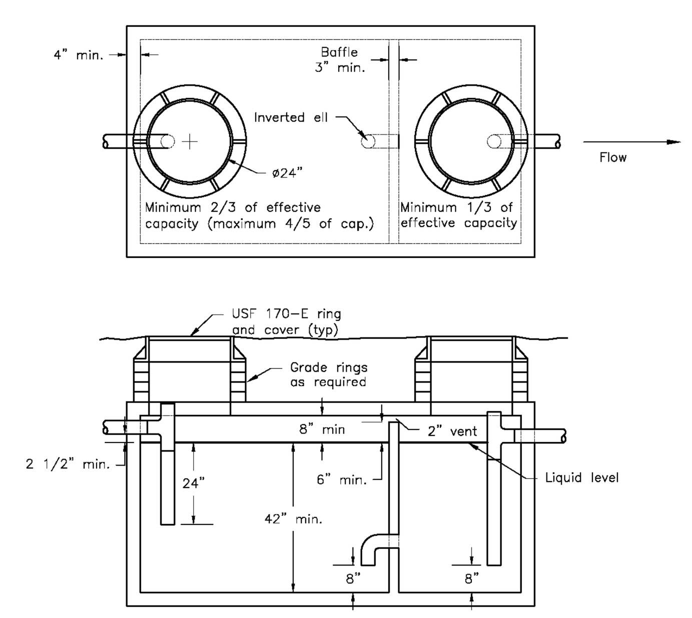

Notes:

1. Minimum tank volume (effective capacity) is 750 gallons. Maximum tank volume is 1250 gallons. 1500 gallon tanks may be approved on a case by case basis.
2. Multiple units shall be linked in series.
3. Provide a minimum 8" freeboard above the liquid level.
4. Minimum effective depth of liquid compartments is 42".
5. Minimum pipe size is 4".
6. Use 4000 psi Portland Type II concrete with minimum 3/4 " cover on reinforcing steel.
7. Interceptor tank and manholes subject to traffic shall be designed for AASHTO H-20 loading.
8. Manhole covers shall be stamped "grease".
9 . Provide 2" gap between baffle and tank top.
10. Only kitchen wastewater shall pass through a grease interceptor before discharge to sanitary sewer system.
11. Refer to chapter 64E-6.013 of the Florida Administrative Code.

Scale 3/8 " = 1 foot	Grease Interceptor	US-17
Brevard County Utility Services		January 2018

1

W:\2020\20-1060 BEACHSIDE TIFFANYS\CAD\Site\20-1060 COVER-DETAILS.dwg 3/16/2021 3:04 PM TAINY C

	REVISIONS	DATE
8		
7		
6		
5		
4		
3		
2	COMMENTS	XX-XX-XXXX
1	INDIATLANTIC, FDOT, COUNTY COMMENTS	02-16-2021

JOB NO.	20-1060
DESIGNED	TAC
DRAWN	AFR
DATE	10-22-2020
CHECKED	BAM
DATE ISSUED	3/16/2021

MBV ENGINEERING, INC.
MOIA BOWLES VILLAMIZAR & ASSOCIATES
CIVIL ▪ STRUCTURAL ▪ SURVEYING ▪ ENVIRONMENTAL CA#3728
1250 W. EAU GALLIE BLVD, SUITE H
MELBOURNE, FLORIDA 32935
P: 321-253-1510 F:321-253-0911
ALSO WITH OFFICES IN:
VERO: 772-569-0035, FT PIERCE: 772-468-9055, PALM CITY: 772-426-9959

UTILITY DETAILS

TIFFANY'S BEACHSIDE

TOWN OF INDIALANTIC FLORIDA

BRUCE A. MOIA LICENSE No. 47529 STATE OF FLORIDA PROFESSIONAL ENGINEER

BRUCE A. MOIA
FL. P.E. #47529
DATE: 3/16/2021

SHEET

C-12

20-1060

PRELIMINARY SET

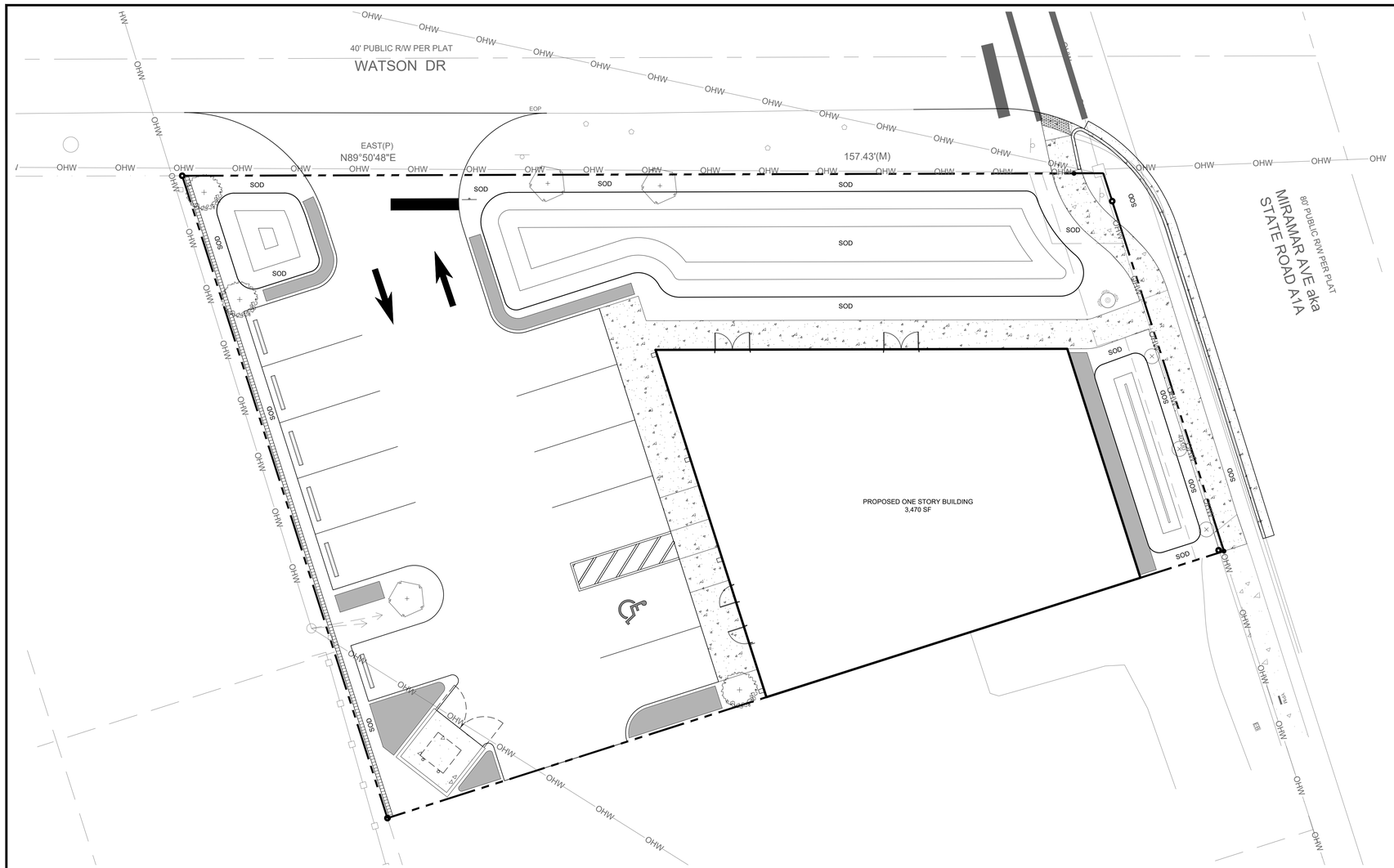

LANDSCAPE NOTES

1. ALL LANDSCAPING SHALL BE INSTALLED IN ACCORDANCE WITH THE APPLICABLE PROVISIONS OF TOWN OF INDIATLANTIC LAND DEVELOPMENT REGULATIONS.
2. ALL PLANTING BEDS SHALL BE FULLY MULCHED TO A DEPTH OF 3" WITH A BARK OR SHREDDED ORGANIC MATERIAL MULCH.
3. ALL LANDSCAPED AREAS SHALL BE 100% IRRIGATED WITH AN AUTOMATIC SPRINKLER SYSTEM. AN IRRIGATION PERMIT WILL BE REQUIRED PRIOR TO CONSTRUCTION OF THE IRRIGATION SYSTEM.
4. AREAS NOT INDICATED AS PLANTING BEDS CONTAINING TREES AND-OR SHRUBS SHALL BE FULLY SODDED.
5. ALL LANDSCAPE MATERIALS SHALL BE FLORIDA NO. 1 OR BETTER AND FREE FROM PESTS AND DISEASE.
6. ALL SHOCKED LANDSCAPE MATERIALS (LEAFLESS, MOSTLY LEAFLESS) WILL NOT BE ACCEPTED AS FLORIDA NO. 1 MATERIAL. ALL REQUIRED MATERIAL MUST MEET FLORIDA NO. 1 STANDARDS AT THE TIME OF CERTIFICATE OF OCCUPANCY INSPECTION.

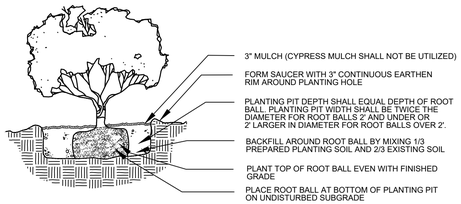

SHRUB/GROUNDCOVER PLANTING DETAIL

N.T.S.

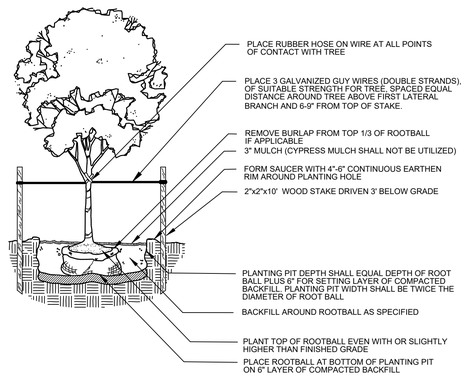

TREE PLANTING DETAIL

N.T.S.

LANDSCAPE LEGEND

- SOUTHERN MAGNOLIA (3 TREES) — MAGNOLIA GRANDIFLORA (10' MINIMUM TRUNK HEIGHT, 2" MINIMUM CALIPER AT PLANTING)
- LITTLE GEM MAGNOLIA (3 TREES) — MAGNOLIA GRANDFLORA (10' MINIMUM TRUNK HEIGHT, 2" MINIMUM CALIPER AT PLANTING)
- 430 SF INTERIOR PARKING LANDSCAPE AREA (SHRUBS/GROUNDCOVERS FLORIDA NATIVE & SALT TOLERANT)
- SHRUB (3 SHRUBS) FLORIDA NATIVE & SALT TOLERANT

IMPERVIOUS AREA = .215 AC. = 68.04%
LANDSCAPE AREA = .101 AC. = 31.96% > 5% LANDSCAPE AREA REQUIREMENT
(INCLUDES OPEN SPACE SODDED, INTERIOR LANDSCAPE AREAS & DRY RETENTION AREAS)

72 HOURS BEFORE DIGGING CALL TOLL FREE 811 Know what's below. Call before you dig.

N

GRAPHIC SCALE
10 0 5 10
(IN FEET)
1 inch = 10 ft.

REVISIONS		DATE
1	INDIATLANTIC, FDOT, COUNTY COMMENTS	02-16-2021
2	COMMENTS	xx-xx-xxxx
3		
4		
5		
6		
7		
8		

JOB NO.	20-1060
DESIGNED	TAC
DRAWN	AFR
DATE	10-22-2020
CHECKED	BAM
DATE ISSUED	3/16/2021

MBV ENGINEERING, INC.
MOIA BOWLES VILLANIZAR & ASSOCIATES
CIVIL • STRUCTURAL • SURVEYING • ENVIRONMENTAL
MELBOURNE, FLORIDA 32935 CA#3728
1250 W. EAU GALLIE BLVD. SUITE H
P: 321-253-1510 F: 321-253-0911
LB#2-9010 WWW.MBVEA.COM
VERO: 772-569-0035 FT PIERCE: 772-468-9055 PALM CITY: 772-426-9969

LANDSCAPING PLAN

TIFFANY'S BEACHSIDE
TOWN OF INDIALANTIC FLORIDA

BRUCE A. MOIA LICENSE No. 47529 STATE OF FLORIDA PROFESSIONAL ENGINEER

BRUCE A. MOIA
FL. P.E. #47529
DATE: 3/16/2021

SHEET
L-01

20-1060
PRELIMINARY SET

W:\2020-1060 BEACHSIDE TIFFANYS\CAD\BAD\25-1060 NEIGHBOR LANDS.dwg 3/16/2021 3:05 PM TANY

TIFFANY'S
JC TOKE & RAMEN

SUBJECT: Ordinance 2021-05 regarding Mobile Food Dispensing Vehicles (Food Trucks)

Staff Report – Town of Indialantic **Meeting Date: March 23, 2021**

Summary:

The Florida legislature adopted HB 1193 in 2020 (F.S. 509.102) limiting a municipality's ability to regulate food trucks with the exception of zoning (locations). Section 509.102, F.S., provides that a municipality may not prohibit mobile food dispensing vehicles from operating within the entirety of a municipal jurisdiction. Town Attorney Paul Gougelman drafted Ordinance 2021-05 to establish land use and zoning regulations for property upon which a mobile food dispensing vehicle is authorized to operate. This ordinance is similar to one recently adopted by the City of Cape Canaveral.

Recommendation: Discussion/Action.

Submitted by:

Rebekah Raddon
Town Clerk

Approved for agenda:

Michael L. Casey
Town Manager

ORDINANCE NO. 2021-05

AN ORDINANCE OF THE TOWN OF INDIALANTIC, BREVARD COUNTY, FLORIDA, RELATING TO ZONING REQUIREMENTS FOR MOBILE FOOD DISPENSING VEHICLES; EXEMPTING MOBILE FOOD DISPENSING VEHICLES FROM CONCURRENCY MANAGEMENT IN CHAPTER 105; CREATING SECTION 113-49, TOWN CODE OF ORDINANCES, AUTHORIZING THE OPERATION OF "MOBILE FOOD DISPENSING VEHICLES" AS A TEMPORARY ACCESSORY USE IN CERTAIN LIMITED ZONING DISTRICTS IN FURTHERANCE OF SECTION 509.102(2), FLORIDA STATUTES, AND AT SPECIAL EVENTS AUTHORIZED BY THE TOWN; PROVIDING GENERAL STANDARDS FOR OPERATING MOBILE FOOD DISPENSING VEHICLES; AMENDING PERMITTED ACCESSORY USES IN THE CH AND SC ZONING DISTRICTS IN SECTION 113-338 AND 113-339 OF THE TOWN CODE OF ORDINANCES; PROVIDING FOR SEVERABILITY/INTERPRETATION; AND PROVIDING AN EFFECTIVE DATE.

WHEREAS, the Town is granted the authority, under Section 2(b), Article VIII, of the State Constitution, to exercise any power for municipal purposes, except when expressly prohibited by law; and

WHEREAS, the Florida Legislature recently enacted Section 509.102, Florida Statutes, which defines the term "mobile food dispensing vehicle" as any vehicle that is a public food service establishment and that is self-propelled or otherwise moveable from place to place and includes self-contained utilities, including, but not limited to, gas, water, electricity, or liquid waste disposal; and

WHEREAS, the Town Council recognizes that effective July 1, 2020, Section 509.102, Florida Statutes, (§75, Chapter 2020-160, Laws of Florida), provides a limited state preemption regarding "mobile food dispensing vehicle" and that a municipality may not require a separate license, registration, or permit other than the license required by the state, or require the payment of any license, registration, or permit fee other than the fee required by the state, as a condition for the operation of a mobile food dispensing vehicle within the municipality; and

WHEREAS, the Town Council also recognizes that Section 509.102, Florida Statutes, provides that a municipality may not prohibit mobile food dispensing vehicles from operating within the entirety of a municipal jurisdiction; and

WHEREAS, the Town Council further finds that although Section 509.102, Florida Statutes, does preempt municipalities in certain areas, Section 509.102, Florida Statutes is intended to be a partial preemption of municipal home rule authority because it expressly states that "this section may not be construed to affect a municipality, county, or other local governmental entity's authority to regulate the operation of mobile food dispensing vehicles other than the regulations described in Section 509.102(2), Florida Statutes; and

WHEREAS, the Town Council hereby finds that despite Section 509.102, Florida Statutes, municipalities continue to enjoy significant home rule authority to regulate land use, zoning and operational standards related to mobile food dispensing vehicles; and

WHEREAS, under regulated circumstances, mobile food dispensing vehicles provide a valuable and convenient service to the community by providing food and beverage options at special events and other appropriate venues; and

WHEREAS, the Town Council wishes to support convenient food and beverage options at special events and other appropriate venues and encourage and support local business and entrepreneurship by adopting uniform regulations to allow the operation of mobile food dispensing vehicles within the Town consistent with the preemption provided in Section 509.102, Florida Statutes; and

WHEREAS, the Town Council finds that the use and operation of mobile food dispensing vehicles on real property directly affects the use of land within the Town, and therefore, such uses are subject to the Town's legitimate land use and zoning powers under the Florida Municipal Home Rule Powers Act, Community Planning Act and other applicable law. *See also*, Village of Euclid, Ohio v. Ambler Realty Co., 272 U.S. 365 (1926) (The concept of planning and zoning is a legitimate exercise of the police power of municipalities.); and

WHEREAS, unless the operation of mobile food dispensing vehicles within the Town is limited to certain commercial and industrial zoning districts or temporary special events, and subject to some level of site plan review by the Town to ensure that the real property on which they operate is suitable to accommodate such use, the operation of such vehicles may negatively impact the use of real property and surrounding properties and create public nuisances; and

WHEREAS, the Town Council desires to avoid such negative impacts and public nuisances; and

WHEREAS, the Town Council also finds that the use and operation of mobile food dispensing vehicles should be governed by other traditional land use and zoning requirements as more specifically stated herein in order to avoid adverse negative effects which may be cause by the operation of such vehicles on real property and

safeguard the community; and

WHEREAS, the Town Council further finds that for mobile food dispensing vehicles to successfully operate their respective businesses for profit within the jurisdictional limits of the Town, such vendors must also rely upon and use Town streets; and

WHEREAS, the Town Council additionally finds and recognizes that Florida courts have long held that municipalities have the historic ability to regulate commercial use of Town streets and that the use of public roads for profit is a privilege, not a right, and can be regulated and controlled by the government in furtherance of the public health, safety and welfare. *See* Seaboard Air Line Ry. Co. v. Wells, 100 Fla. 1027, 1034, 130 So. 587, 591 (Fla. 1930); Pennington v. Quigg, 94 Fla. 1056, 1065, 114 So. 859, 862 (Fla. 1927) (The right to use Town streets for conducting private business is not an inherent right and can only be acquired by permission or license from the Town); Jarrell v. Orlando Transit Co., 123 Fla. 776, 778, 167 So. 664, 665 (Fla. 1936) (There is then no such thing as a natural right to use the public highways for commercial purposes. A Town may grant a limited right to use the streets for private business, but such is "a privilege that may be restricted or withdrawn at the discretion of the granting power. The power to do so is plenary and may extend to absolute prohibition"); and

WHEREAS, the Town Council deems that it is necessary to regulate mobile food dispensing vehicles operating upon streets within the Town so such vendors operate in areas with sufficient pedestrian traffic and in a manner that avoids traffic conflicts and congestion and otherwise generally protects public safety and does not detract from the aesthetic beauty and attractiveness of the surrounding streetscape and properties; and

WHEREAS, Policy 3.1 of the Future Land Use Element of the Comprehensive Plan states:

> Policy 3.1: Continually review the Zoning Code to ascertain if there are any uses permitted or loopholes to allow any uses which are not consistent with the low density character of the Town, and amend the Code accordingly; and

WHEREAS, Objective 7 of the Future Land Use Element of the Comprehensive Plan states:

> Objective 7: Encourage the use of innovative land development regulations; and

WHEREAS, Policy 3.3 of the Transportation Element of the Comprehensive Plan states:

Policy 3.3: The Town shall require consideration of pedestrian safety in the planning, design, and construction of all transportation facilities; and

WHEREAS, the Zoning and Planning Board has reviewed this Ordinance and finds that it is consistent with the Comprehensive Plan and in particular with Policy 3.1 and Objective 7 of the Future Land Use Element and Policy 3.3 of the Transportation Element; and

WHEREAS, the Town Council adopts the findings of the Zoning and Planning Board and finds that this Ordinance is in promotion of the public safety and aesthetics by providing for parking areas providing safety to pedestrians and motor vehicle drivers and by improving the attractiveness of parking areas; and

WHEREAS, the Town Council of the Town of Indialantic, Florida, hereby finds this Ordinance to be in the best interests of the public health, safety, aesthetics, and welfare of the citizens of Indialantic.

NOW, THEREFORE, BE IT ENACTED BY THE TOWN COUNCIL OF THE TOWN OF INDIALANTIC, FLORIDA:

SECTION 1. Recitals. The foregoing recitals ("WHEREAS" clauses) are hereby fully incorporated herein by this reference as legislative findings and the intent and purpose of the Town Council of the Town of Indialantic.

SECTION 2. That section 105-4 of the Code of Ordinances of Indialantic, Florida, is hereby amended to read as follows:

Sec. 105-4. - Exemptions.

The following types of development are exempt from the requirements of this chapter:

(1) Remodeling or repair, provided that no increase in square footage is made.

(2) Accessory structures for existing single-family homes that will not increase the number of inhabitants of the structure.

(3) Other developments which do not result in any increase in demand upon established levels of service for public facilities identified in this chapter, as determined by the building official.

(4) Vested projects.

(5) Mobile food dispensing vehicle.

SECTION 3. Mobile Food Dispensing Vehicles. That the Code of Ordinances of Indialantic, Florida, is hereby amended by adding a section, to be numbered 113-249, which said section reads as follows:

Sec. 113-249. Mobile Food Dispensing Vehicles.

(a) *Purpose and intent*. The purpose and intent of this section is to establish land use and zoning regulations for real property upon which a mobile food dispensing vehicle is authorized to operate within the jurisdictional limits of the town. Mobile food dispensing vehicles, except for those operating on real property authorized in this section, are prohibited and unlawful on other real property not so authorized. This section is neither intended to prohibit mobile food dispensing vehicles from operating within the entirety of the town nor regulate the licensing, registration, permitting and fees of mobile food dispensing vehicles preempted by the state under F.S. §509.102.

(b) *Definitions*. As used in this section, the following words and phrases shall have the following meanings, unless the context clearly indicates that a difference meaning is intended:

Accessory means clearly incidental or subordinate to and customary in connection with the principal building or use on a developed site and which is located on the same lot or parcel with such principal building or use.

Town manager means the town manager, or said manager's designee.

Developed site means real property upon which a building and other permanent improvements have been legally constructed and which is currently in compliance with all land development regulations and the town code.

Food means all substances commonly used for human consumption as food, beverage, confectionery or condiments, whether simple, mixed or compound, and all substances or ingredients used in preparation thereof.

Mobile Food Dispensing Vehicle has the same meaning as that term is defined in section 509.102(1), Florida Statutes, and upon the effective date of this section means any vehicle that is a public food service establishment and that is self-propelled or otherwise moveable from place to place and includes self-contained utilities, including, but not limited to, gas, water, electricity, or liquid waste disposal.

Public road means any public right-of-way for cars and trucks in the town.

Special event means any organized, temporary public or private celebration or gathering of people which requires a town special event permit including by way of example events relating to athletic contests, carnivals, fairs, cook-offs, entertainment, dancing, music concerts, dramatic productions, art exhibitions, parades, fundraisers (such as religious, charitable, patriotic or philanthropic events), or the sale of merchandise, food or alcohol, or any combination of the foregoing.

(c) *Authorized Locations.* Subject to the terms and conditions set forth in

subsection (d), mobile food dispensing vehicles shall be allowed to operate within the jurisdictional limits of the town in the following authorized areas:

(1) As a temporary accessory use on property which is designated CH, P (except Orlando Park as shown on the plat of Indialantic By-The-Sea Section A, plat book 3, page 90, public records of the county), or SC, on the town's official zoning map. Site plan approval is required pursuant to section 113-27 of this code.

(2) To deliver food for sale during normal lunch (approximately 12:00 PM) or dinner (approximately 6:00 PM) time to employees on-site of an existing business located on property with a zoning designation of C, C-1, C-2, or SC. Sale of food shall be strictly limited to only the employees of the business working on-site during normal business hours of the business. The sale to any other persons shall be strictly prohibited. Sales permitted under this subsection shall be limited to no more than two (2) hours on any day in which the business being served is open for employees to work. The sale of food authorized by this subsection shall be exempt from subsections (d)(4) and (d)(6) of this section. Site plan approval pursuant to section 113-27 of this code is not required; provided, that the property owner or business owner shall coordinate the mobile food dispensing vehicle location with the town to assure that no impediment to traffic or pedestrian travel shall occur.

(3) Within a clearly delineated area on town property or a public road which has been specifically and temporarily set aside for a mobile food dispensing vehicle to operate during a special event which is open to the general public; ~~,~~ provided, that the event has been lawfully permitted by the town and any mobile food dispensing vehicle has been contractually arranged by the event organizer to be part of the event. Site plan approval pursuant to section 113-27 of this code is not required; provided, that the property owner or business owner shall coordinate the mobile food dispensing vehicle location with the town to assure that no impediment to traffic or pedestrian travel shall occur.

(4) Within a clearly delineated area on public or private school property which has been specifically and temporarily set aside for a mobile food dispensing vehicle to operate during a school sponsored event held entirely on school property which is open to the faculty and student body; ~~,~~ provided, that the event has been lawfully permitted by the town and any mobile food dispensing vehicle has been contractually arranged by the school to be part of the event. Site plan approval is required pursuant to section 113-27 of this code.

(5) Within a clearly delineated area on private property which has been specifically and temporarily set aside for a mobile food dispensing vehicle to operate during a special event held entirely on private property which is private or open to the general public; provided, that the event has been lawfully permitted by the town and any mobile food dispensing vehicle has been contractually arranged by the event

organizer to be part of the event. ~~However, a mobile food dispensing vehicle shall not be allowed to operate on any existing single or multi-family residential use property, unless the area being used is common area of a residential project with at least 20 dwelling units.~~ Additionally, a special event allowed on private property under this subsection shall be limited to no more than one event per calendar quarter on said property.

(6) Mobile food dispensing vehicle may operate and sell pre-prepared food on local, non-arterial or non-collector streets in residential zoning districts during daylight hours between sunrise and sunset; provided, that: (i) no stopped or standing mobile food dispensing vehicle interrupts the flow of traffic on the street or pedestrian travel on any sidewalk; (ii) no stopped or standing mobile food dispensing vehicle, partially or wholly, blocks any driveway or point of motor vehicular access from the street on to any public or private property; and (iii) no mobile food dispensing vehicle is stopped on any one block of said street for more than 15 consecutive minutes. Site plan approval is not required for this activity. No mobile food dispensing vehicle may stop and sell food on any local, collector, or arterial street in a non-residential zoning district under this paragraph (c)(6).

(d) *Conditions of Land Use and Operational Standards.* The following land use and operational standards shall apply to all mobile food dispensing vehicles operating within the town:

(1) When the mobile food dispensing vehicle will be operating on private property, a notarized affidavit signed by the property owner indicating that the vehicle has permission to operate and vend on the property shall be submitted to the town. The affidavit must be on a form approved and provided by the town and shall also indicate that the property owner acknowledges the following requirements:

a. The property owner shall comply with all ordinances regarding solid waste disposal and must provide the vehicle access to solid waste collection on the subject property;

b. The property owner shall require that the vehicle meet all applicable federal, state and local statutes, regulations, laws, ordinances, rules and codes including, but not limited to, applicable land use and zoning requirements regarding the subject property including site plan requirements;

c. The property owner shall acknowledge that the property owner understands the regulations governing mobile food dispensing vehicles and will be held responsible, along with the vehicle owner, for any code violations; and

d. The property owner shall ensure that the property will be continuously maintained in a neat, clean, and orderly manner; and

e. The property owner shall ensure the mobile food dispensing vehicle be limited to operating as a temporary accessory use on the subject property.

(2) The subject property must be a developed site. The subject property must not be vacant or unimproved.

(3) No more than one mobile food dispensing vehicle shall be parked or in operation on a single property at any given time, except multiple mobile food dispensing vehicles may be allowed with express written permission of the town during an authorized special event.

(4) With the exception of use pursuant to paragraph (c)(2), (4), and (6), a ~~A~~ mobile food dispensing vehicle may operate at a single location up to a maximum of 3 consecutive days per 15 consecutive day period which shall be 15 consecutive days before and after the time of operation, or if operation is allowed as part of a special event permit, said vehicles may operate in accordance with the duration of the special event permit.

(5) Except with the express written permission of the town during an authorized special event, hours of operation shall be limited between 11 a.m. and 5 p.m.

(6) The person in charge of the mobile food dispensing vehicle when in operation on the developed site must be present at all times during hours of operation.

(7) When the mobile food dispensing vehicle will be operating on private property, the vehicle must be parked when in operation within an area on the property specifically authorized for accessory temporary outdoor sales on the property owner's site plan previously approved by the town. If the property owner does not have specific site plan approval for accessory temporary outdoor sales on the site plan, the property owner shall be required to obtain supplemental site plan approval pursuant to the site plan amendment review procedure and criteria under section 113-27 of the town code before the mobile food dispensing vehicle may operate as an accessory use on the subject property. For purposes of obtaining supplemental site plan approval, the property owner shall submit a site plan or detailed sketch depicting the proposed location of temporary mobile food dispensing vehicle operations; all parking spaces, entrances and exits to and from the site; and distances from any buildings or structures, sidewalks, rights-of-way, fire hydrants, fire lanes and landscaped areas, storm drains, and such other information or documentation deemed by the town to be reasonably necessary to authorize outdoor accessory temporary sales on the subject property in a manner that is compatible with the existing uses on the subject property and the surrounding area and protects the public health, safety, aesthetics, and welfare of the citizens of the town. The supplemental site plan submittal requirements required under this subsection for mobile food dispensing vehicles are in lieu of the site plan amendment submittal requirements under section 113-27, unless major building or infrastructure improvements are being proposed to accommodate the mobile food dispensing vehicles. The mobile food dispensing vehicle temporary sales area must be on a paved surface and not exceed an area of 600 square feet unless the town determines

more area is required and the subject property clearly has ample space to support a larger sales area. The approved area must not adversely affect existing uses on the subject property or the flow of pedestrian and vehicular traffic on the developed site. There must be an adequate number of parking spaces available for the general public visiting the developed site. Supplemental site plan approval granted by the town under this subsection is subject to being suspended or revoked pursuant to subsection (e) or at such time the site plan is revoked or modified by the town.

(8) Outdoor dining areas are prohibited including, but not limited to, tables, chairs, booths, bar stools, benches, and standup counters, except if dining areas are allowed with express written permission of the town during an authorized special event.

(9) Mobile food dispensing vehicles selling or dispensing of food to customers in a moving vehicle or otherwise engaging in drive-up sales is prohibited.

(10) A mobile food dispensing vehicle shall not be located on private property upon which uncorrected code violations exist, or which is under citation for code violations.

(11) Mobile food dispensing vehicles and all materials associated with such vehicles must physically be removed from the property ~~moved~~ at least daily and cannot remain on the subject property outside the approved hours of operation unless otherwise allowed by the town for special events. Overnight parking of mobile food dispensing vehicles is prohibited unless located within an enclosed garage or on property zoned for an authorized open storage use and said storage complies with any applicable storage requirements set forth in the town code.

(12) Mobile food dispensing vehicles shall not sell or dispense alcohol unless specifically approved as part of a special event or other permit approved by the town. The alcohol-related restrictions of chapter 4 of the town code are applicable unless otherwise authorized by the town code, or expressly waived by the town.

(13) The operation of a mobile food dispensing vehicle must not obstruct or interfere with vehicular or pedestrian traffic, building access, fire lanes, crosswalks, driveways, fire hydrants, loading areas, stormwater drainage systems, or landscape buffers associated with the principal use.

(14) Mobile food dispensing vehicles must not enter or park upon playgrounds, playing fields and courts, sidewalks, footpaths or bicycle paths.

(15) Mobile food dispensing vehicles must not stand or park upon any "no parking" area, loading zone, driveway, handicapped parking space, or designated public safety lane (*e.g.,* fire lanes) or within 20 feet of a crosswalk or within

15 feet of a fire hydrant or storm drainage structure.

(16) No additional signage shall be permitted on the developed site related to the mobile food dispensing vehicle except as to signage permanently affixed and displayed on the vehicle.

(17) Amplified music or other sounds from any mobile food dispensing vehicle or from audio equipment installed on the developed site by the property owner or person in charge of the vehicle is prohibited.

(18) Mobile food dispensing vehicles shall maintain an appropriate number and size of operable fire extinguishers.

(19) The operation of a mobile food dispensing vehicles shall not create or cause nuisance conditions to include, but not be limited to, displaying flags or unauthorized signage, loud noises, visual glare, flashing or animated lights, shouting or amplified music or sound, excessive fumes or smoke, environmental hazards, and any vehicular or pedestrian hazard.

(20) The grounds around the mobile food dispensing vehicle and within the vending space shall be kept free of litter, trash, paper and waste at all times. Waste containers shall be provided by the mobile food dispensing vehicle operator, and all trash shall be taken with the vehicle when the vendor leaves the developed site or the mobile food dispensing vehicle is placed in a garage, or the trash must be placed inside a commercial solid waste dumpster provided by the property owner and in use and located on the developed site.

(21) Mobile food dispensing vehicles must not discharge waste, fat, oil, grease or such other similar substances from the vehicle. All such substances related to or generated from the vehicle shall be taken with the vehicle when vehicle leaves the subject property and disposed of in accordance with law or local ordinance.

(22) Mobile food dispensing vehicles shall comply with all applicable federal, state and local laws, rules and regulations including, but not limited to, the standards specified by Chapter 5K-4.002, F.A.C., and the U.S. Food and Drug Administrative 2001 Food Code, as such laws, rules and regulations may be amended from time to time.

(23) A copy of the appropriate license(s) issued from the Florida Department of Business & Professional Regulation (Division of Hotels and Restaurants) shall be displayed conspicuously to the general public be maintained on the mobile food dispensing vehicle at all times when the vehicle is in operation on real property located within the town, and shall be made available for inspection upon request by the town's

law or code enforcement officers.

(24) Because of the temporary nature of the placement of mobile food dispensing vehicles, the placement of a mobile food dispensing vehicle is exempted from compliance with concurrency management as provided in chapter 105 of this code.

(e) *Penalties.*

(1) Owners and operators of mobile food dispensing vehicles, and property owners on which such vehicles operate, shall be jointly and severally liable for any violations of this section. The penalty provisions set forth in section 1-9 of the town code shall apply to violations of this section.

(2) In addition to the penalties authorized by subsection (1), the town manager may also suspend or revoke the property owner's site plan approval for accessory temporary outdoor sales and/or special event permit, as may be applicable, upon a finding that a mobile food dispensing vehicle was operating on the subject property in violation of this section. Prior to suspending or revoking the applicable site plan approval and/or special event permit, the town manager shall: (i) Afford the property owner notice of the violation(s) and a reasonable, informal opportunity to be heard regarding the violation(s); (ii) Consider the property owner's past record of compliance with this section and related laws; and (iii) Consider the degree of risk to public health, safety, aesthetics, and welfare arising from the alleged violation(s) in evidence.

(3) The town manager's decision under subsection (2) shall be rendered in writing and shall be deemed final.

(4) Any site plan approval or special event permit suspended or revoked pursuant to this subsection shall immediately be void and of no further use and effect to any person. If revoked, the property owner shall be prohibited from seeking subsequent site plan approval for accessory temporary outdoor sales or a special event permit for the subject property for a period of one (1) year from the date of the revocation.

(5) The operation of a mobile food dispensing vehicle without a valid site plan approval for accessory temporary outdoor sales or special event permit (including if operated during a period of license suspensions or revocation) shall subject the owner of the property and the owner of the vehicle and operator thereof to code enforcement action, civil action, or action as otherwise allowed by state law or the town code.

SECTION 4. Amendment of CH zoning district. That section 113-338(c) of the Code of Ordinances of Indialantic, Florida, is hereby amended to read as follows:

Sec. 113-338. CH Church Districts.

* * *

(c) Accessory buildings and uses. All accessory uses shall meet the requirements of section 113-225. The following accessory uses are permitted:

(1) Satellite dish antenna in the manner specified in section 113-243.

(2) Accessory ecclesiastical buildings.

(3) Meeting rooms.

(4) Parking areas.

(5) Any other accessory use of one or more of the principal uses clearly incidental to the principal permitted use and in keeping with the character of the zoning district.

<u>(6) Mobile food dispensing vehicles consistent with section 113-249 of this code.</u>

* * *

SECTION 5. Amendment of SC zoning district. That section 113-339 of the Code of Ordinances of Indialantic, Florida, is hereby amended to read as follows:

Sec. 113-339. SC Shopping Center Districts.

Within SC Shopping Center Districts, the following regulations shall apply:

* * *

<u>(1.5) Accessory uses.</u> <u>Mobile food dispensing vehicles consistent with section 113-249 of this code.</u>

* * *

SECTION 6. Severability Clause/Interpretation.

(a) In the event that any term, provision, clause, sentence or section of this Ordinance shall be held by a court of competent jurisdiction to be partially or wholly unenforceable or invalid for any reason whatsoever, any such invalidity, illegality, or unenforceability shall not affect any of the other or remaining terms, provisions, clauses, sentences, or sections of this Ordinance, and this Ordinance shall be read and/or applied as if the invalid, illegal, or unenforceable term, provision, clause, sentence, or section did not exist.

(b) That in interpreting this Ordinance, <u>underlined</u> words indicate additions to existing text, and ~~stricken through~~ words include deletions from existing text. Asterisks (* * * *) indicate a deletion from the Ordinance of text, which exists in the

Code of Ordinances. It is intended that the text in the Code of Ordinances denoted by the asterisks and not set forth in this Ordinance shall remain unchanged from the language existing prior to adoption of this Ordinance.

SECTION 7. Effective Date. This Ordinance shall become effective upon adoption of this Ordinance.

PASSED by the Town Council of the Town of Indialantic on first reading on the ____ day of _____, 2021, and ADOPTED by the Town Council of the Town of Indialantic, Florida on final reading on the____ day of _____, 2021.

TOWN OF INDIALANTIC

_____
David Berkman
Mayor

ATTEST:_____
Rebekah Raddon, CMC
Town Clerk